THIS DRAWING IS UNPUBLISHED. RELEASED FOR PUBLICATION -,- .
© COPYRIGHT - By - ALL RIGHTS RESERVED.

REVISIONS

P	LTR	DESCRIPTION	DATE	DWN	APVD
	J4	REVISED PER ECR-17-000528	01FEB2017	BDA	DR

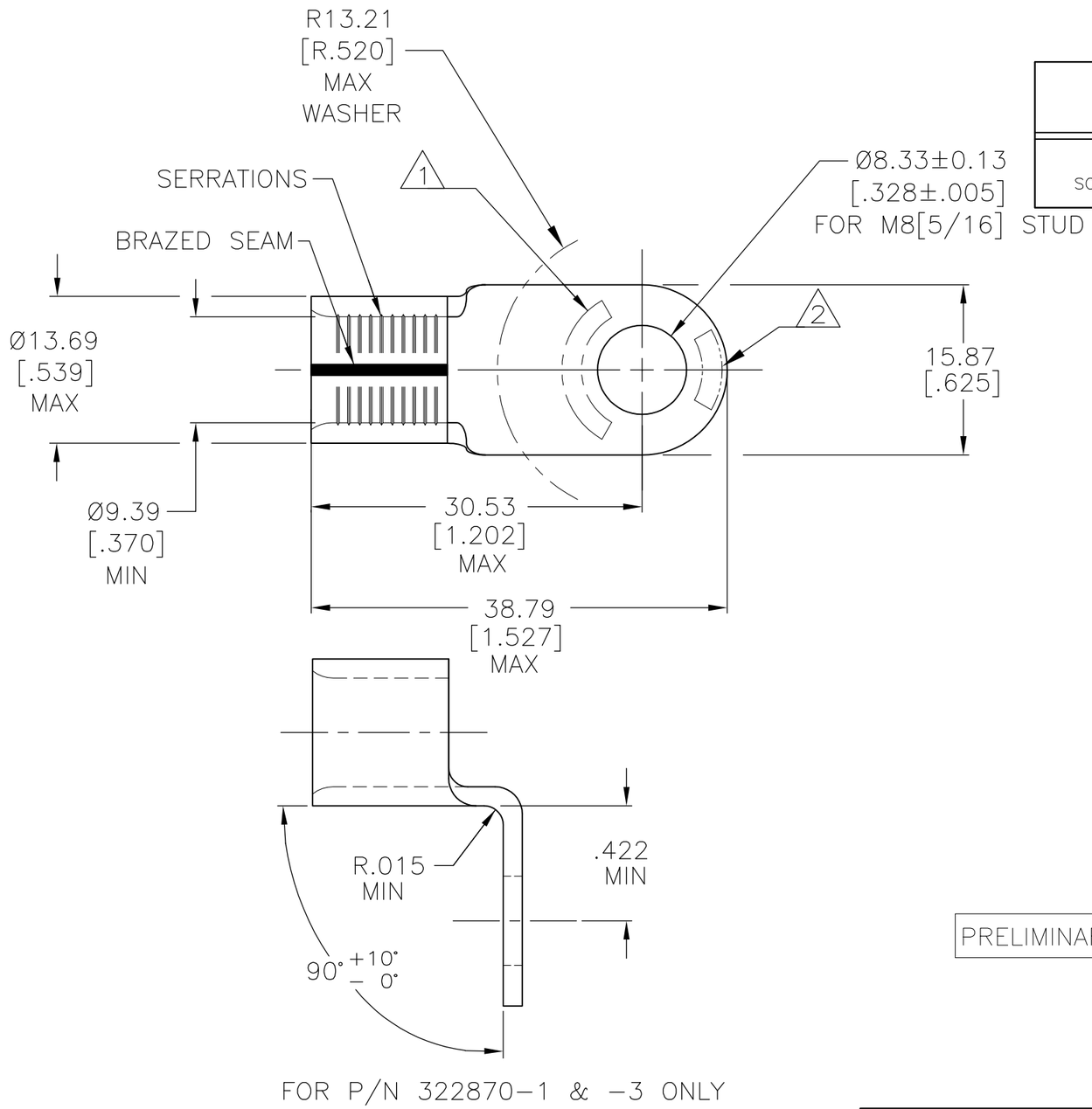

FOR P/N 322870-1 & -3 ONLY

AMP WIRE RANGE	9 UL Listed FILE E13288	9 CSA LR7189 Certified	MILITARY P/N AND CLASS 6
2 AWG SOLID OR STRANDED	2 AWG STRANDED	2 AWG SOLID OR STRANDED	MS 20659-147 CLASS 2

1 STAMP AMP 2W* APPROX AS SHOWN.

2 STAMP 60-75 APPROX AS SHOWN.

3 MATERIAL THK: 1.78±0.08[.070±.003].

4 TIN PL 0.00254[.000100] MIN EXT. THK PER ASTM B545

5 NICKEL PL 0.00762[.000300] MIN EXT THK PER SAE AMS QQ-N-290.

7 GOLD PL 0.00127[.000050] MIN THK PER MIL-G-45204 OVER NICKEL PL 0.00076[.000030] MIN THK PER SAE AMS QQ-N-290.

8 NOTE DELETED

	QTY.	PACKAGE TYPE	MAX TEMP RATING	FINISH	PART NO.
	25	LOOSE PIECE	170°C[338°F]	4	8-322870-3
	50		343°C[650°F]	5	2-322870-2
PRELIMINARY	50		343°C[650°F]	5	322870-3
	50		170°C[338°F]	4	322870-1 9
	50		170°C[338°F]	4	322870 6 9

AMP INCORPORATED
CUSTOMER SERVICE SYSTEMS

FOR ADDITIONAL PRODUCT INFORMATION OR COPIES OF DRAWINGS AND TECHNICAL DOCUMENTS	PRODUCT INFORMATION CENTER 1-800-522-6752
FOR APPLICATION TOOLING INFORMATION	TOOLING ASSISTANCE CENTER 1-800-722-1111
FOR ORDER ENTRY	1-800-526-5142

MAX RECOMMENDED OPERATING TEMPERATURE: SEE TABLE

VOLTAGE RATING: N/A

CIRCULAR MIL AREA: 26.7-42.4mm² [52,600-83,700] SOLID OR STRANDED

THIS DRAWING IS A CONTROLLED DOCUMENT.

DIMENSIONS: INCHES

TOLERANCES UNLESS OTHERWISE SPECIFIED:
0 PLC ± -
1 PLC ± -
2 PLC ± 0.20[.008]
3 PLC ± -
4 PLC ± -
ANGLES ± -

MATERIAL: COPPER ASTM B-152 ANNEALED

FINISH: SEE TABLE

DWN	DK SCHRUM	5/25/93
CHK	RD HEIM	1/27/94
APVD	JL MECKLEY	1/27/94
PRODUCT SPEC	—	
APPLICATION SPEC	—	
WEIGHT	—	

TE Connectivity

NAME: TERMINAL, RING TONGUE, SOLISTRAND AND STRATO-THERM, 2 AWG

SIZE	CAGE CODE	DRAWING NO	RESTRICTED TO
A3	00779	C-322870	—

CUSTOMER DRAWING | SCALE 2:1 | SHEET 1 OF 1 | REV J4

1470-19 (1/15)