THIS DRAWING IS UNPUBLISHED. RELEASED FOR PUBLICATION -,- .
© COPYRIGHT - By - ALL RIGHTS RESERVED.

LOC	DIST
AF	50

REVISIONS

P	LTR	DESCRIPTION	DATE	DWN	APVD
	L	REVISED PER ECR-12-013445	09NOV12	KH	PD

1 CONTINUOUS STRIP ON REELS

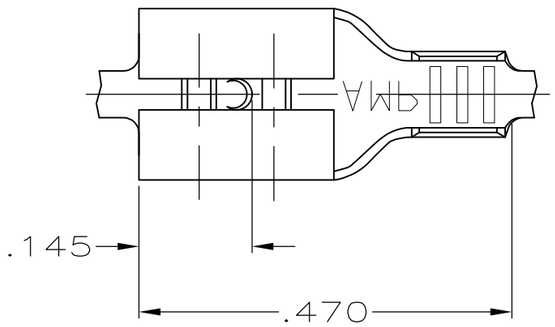

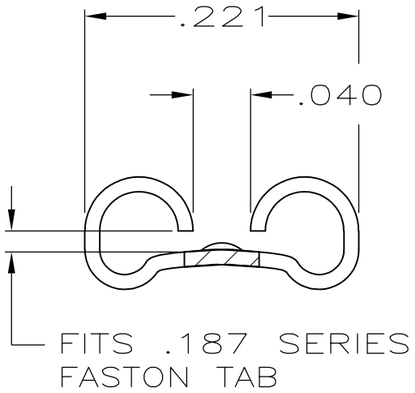

VIEW A—A
SCALE 8:1

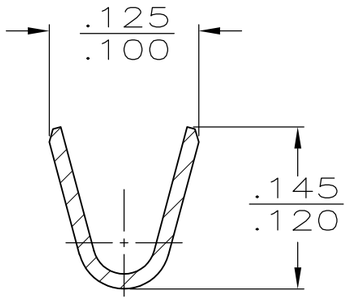

SECTION B—B
SCALE 8:1

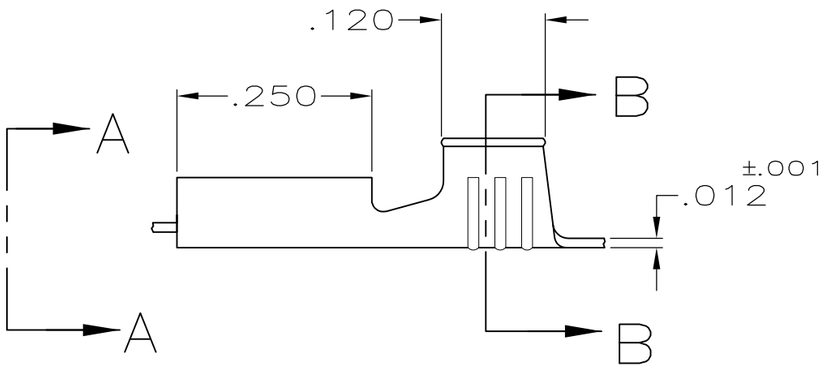

	FINISH	MATERIAL	WIRE SIZE	MATING TAB THK ±.001	PART NUMBER
	NICKEL	#2H STEEL	20-16	.020	42373-3
	TIN	BRASS	20-16	.020	42373-2
OBSOLETE	—	#4H BRASS	20-16	.020	~~42373-1~~

STRIP LENGTH ±.015	TYPE	WIDTH	±.002 HEIGHT	WIRE
.188	F	.090	.060	16
			.053	18
			.049	20

WIRE BARREL CRIMP

THIS DRAWING IS A CONTROLLED DOCUMENT.

DIMENSIONS: INCHES

TOLERANCES UNLESS OTHERWISE SPECIFIED:
0 PLC ± —
1 PLC ± —
2 PLC ± —
3 PLC ± .015
4 PLC ± —
ANGLES ± —

MATERIAL: SEE TABLE
FINISH: SEE TABLE

DWN JR RUTH 7/14/89
CHK MS FEHER 7/14/89
APVD C MEYERS 7/14/89
PRODUCT SPEC —
APPLICATION SPEC —
WEIGHT —

TE Connectivity

NAME: RECEPTACLE, FASTON™ .187 SERIES
—

SIZE	CAGE CODE	DRAWING NO	RESTRICTED TO
A3	00779	C-42373	—

CUSTOMER DRAWING

SCALE	SHEET	REV
5:1	1 OF 1	L

1470-19 (3/11)