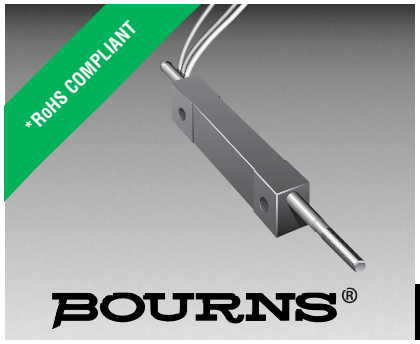

Features

- Compact
- Lightweight
- Long life
- Infinite resolution
- Free shaft rotation
- AC or DC
- Shaft options available
- Flexible wire leads
- Economical
- RoHS compliant*

3048 Linear Motion Potentiometer

Specifications†

Standard Electrical Travel
..... 0.2, 0.3, 0.4, 0.5 in.
(5.08, 7.62, 10.16, 12.70 mm)
Standard Resistances
..... 1K ohms to 50K ohms (± 20 %)
Independent Linearity ..... ± 5 %
Resolution ..... Infinite
Power Rating @ 70 °C (158 °F)
Range 2, 3 ..... 0.12 watt
Range 4, 5 ..... 0.25 watt
Operating Temperature Range
..... -55 °C to +125 °C
Temperature Coefficient ... 1000 PPM/°C
Insulation Resistance ..... 50 megohms
@ 500 VDC
Backlash ..... Negligible
Shaft Actuating Force ..... 4 oz. max.
@ 70 °F
Life ..... 500,000 cycles
Shock ..... 50 G for 7 msec
Vibration ..... 20 G, 10-2 kHz
Marking ..... Manufacturer's trademark, resistance code, wiring diagram, date code, manufacturer's model number and style

Specifications are typical. Contact factory for special requirements.
† Specifications applicable from 5 % to 95 % of electrical travel.

How to Order

3048 L - 2 - 502

Model
Style
Range (Travel)
2 = 0.2 " (5.08 mm)
3 = 0.3 " (7.62 mm)
4 = 0.4 " (10.16 mm)
5 = 0.5 " (12.70 mm)
Resistance Value

Stainless steel shaft is available upon request.

Standard Resistance Table

Resistance (Ohms)	Resistance Code
1,000	102
2,500	252
5,000	502
10,000	103
20,000	203
50,000	503

Product Dimensions

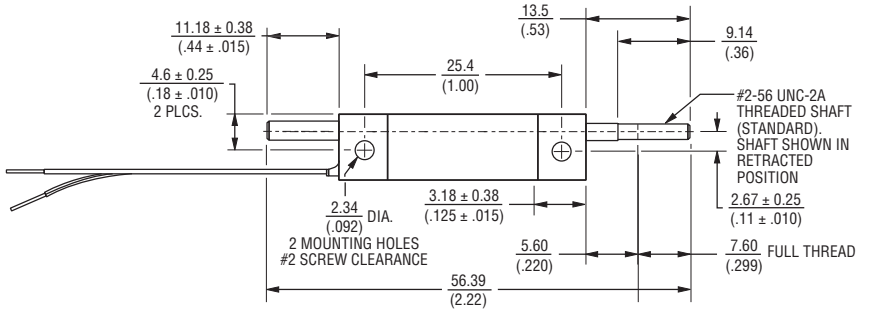

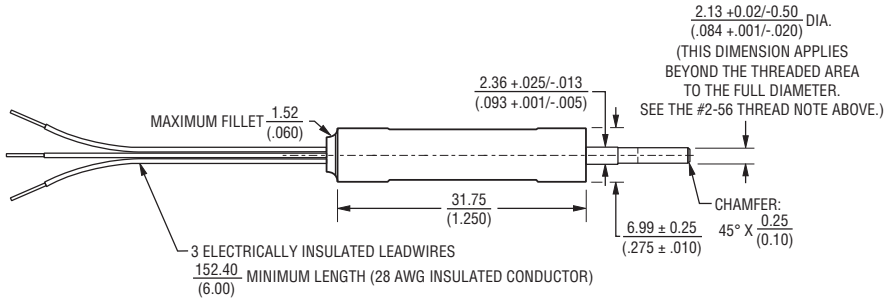

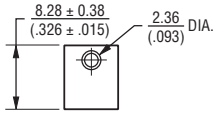

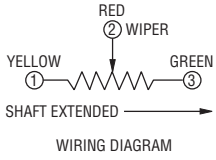

WIRING DIAGRAM

TOLERANCES: ± .010 (0.25) EXCEPT WHERE NOTED

DIMENSIONS: MM (INCHES)

REV. 01/13

*RoHS Directive 2002/95/EC Jan 27 2003 including Annex.
Specifications are subject to change without notice.
Customers should verify actual device performance in their specific applications.