FO-52181-F

REV	DOCUMENT	CHANGED BY	CHECK
4	0036649	SS 18JAN08	BLR

XCA 4 ___ — N

SERIES
AMPLIFIED (4V SPAN)

DESIGNATES PRESSURE
L - LOW PRESSURE (IN H_2O)
- NO DESIGNATION (PSI)

PRESSURE RANGE (1)
004, 010 IN H_2O
00.3 01, 05, 15, 30, 60, 100, 150 PSI

PRESSURE REFERENCE
G - GAGE
D - DIFFERENTIAL
A - ABSOLUTE* ≥5 PSIA

PACKAGE TYPE
N - PLASTIC

NOTES
(1) ALL PARAMETERS ARE MESURED AT 5.0 VOLT EXCITATION, FOR THE NOMINAL FULL SCALE PRESSURE AND ROOM TEMPERATURE UNLESS OTHERWISE SPECIFIED. PRESSURE MEASUREMENTS ARE WITH POSITIVE PRESSURE APPLIED TO PORT 2 OR VACUUM TO PORT 1. FOR ABSOLUTE DEVICES PRESSURE IS APPLIED TO PORT 1
(2) SHIFT IS RELATIVE TO 25°C
(3) LINEARITY IS DETERMINED USING BEST STRAIGHT LINE CURVE FIT THROUGH ZERO, 1/2 FULL SCALE, AND FULL SCALE; HYSTERESIS IS MECHANICAL ONLY
(4) PROOF PRSSURE SHOULD NOT EXCEED 100 PSI AND BURST PRSSURE SHOULD NOT EXCEED 300 PSI
(5) HI/LO SPAN IS THE ALGEBRAIC DIFFERENCE OF OFFSET VOLTAGE AND HI OR LO OUTPUTS
(6) SPAN IS THE ALGEBRAIC DIFFERENCE OF OUTPUT END POINTS
(7) PRESSURE RANGE DEPICTS THE FULL SCALE PRESSURE OF THE SENSOR
(8) FS REPRESENTS THE OUTPUT VALUE AT FULL SCALE PRESSURE

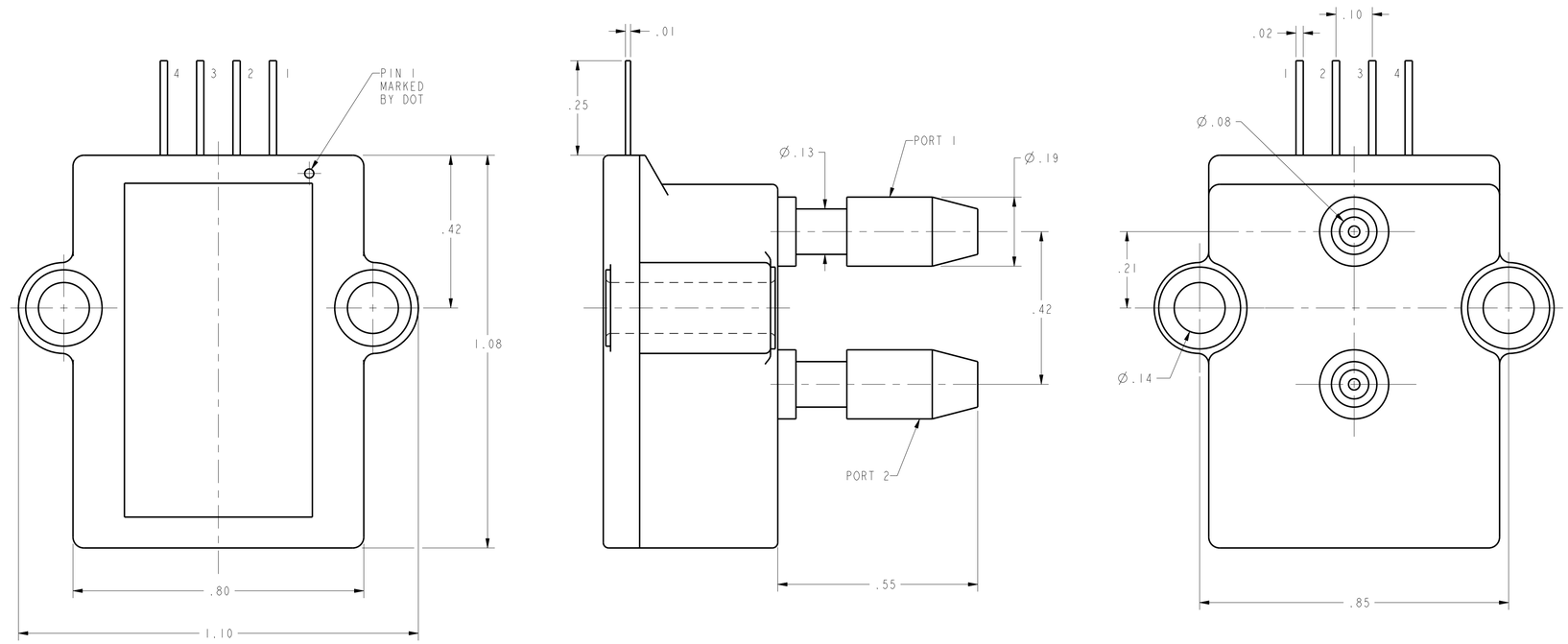

SPECIFICATIONS

PARAMETER (1)		MIN	NOM	MAX	UNITS
DIFFERENTIAL	OFFSET VOLTAGE (OUTPUT AT 0 PSID)	2.200	2.250	2.300	V
	HI SPAN ($P_2 > P_1$) (5)	1.950	2.000	2.050	
	LO SPAN ($P_1 > P_2$) (5)	-1.950	-2.000	-2.050	
	SPAN (HI SPAN - LO SPAN) (6)	---	4.000	---	
GAGE	OFFSET VOLTAGE (OUTPUT AT 0 PSIG)	0.200	0.250	0.300	V
	SPAN ($P_2 > P_1$) (6)	3.900	4.000	4.100	
ABSOLUTE	OFFSET VOLTAGE (OUTPUT AT 0 PSIA)	0.200	0.250	0.300	V
	SPAN (PRESSURE APPLIED TO P1) (6)	3.900	4.000	4.100	
EXCITATION VOLTAGE		3.0	5.0	16.0	V
TC SPAN (0°C-50°C) (2)		---	±0.6	±1.0	%FS
TC OFFSET (0°C-50°C) (2)		---	±0.6	±1.0	%FS
LINEARITY AND HYSTERESIS (3)		---	±0.3	±0.5	%FS
REPEATABILITY		---	±0.1	---	%FS
STORAGE TEMPERATURE RANGE		-40	---	125	°C
PROOF PRESSURE (VERIFIED BY DESIGN) (4)		---	3X	---	FS
BURST PRESSURE (VERIFIED BY DESIGN) (4)		---	5X	---	FS

MEDIA CAPABILITY, WETTED MATERIALS
(APPLY CLEAN DRY AIR ONLY)

PRESSURE PORT 2 (HIGH)	SILICON DIAPHRAGM, GLASS FILLED NYLON, AND ALUMINA CERAMIC
PRESSURE PORT 1 (LOW)	SILICON DIAPHRAGM, GLASS FILLED NYLON, AND ALUMINA CERAMIC

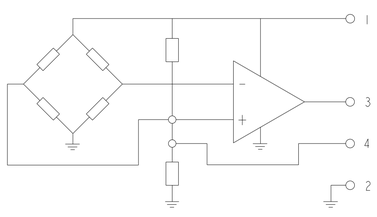

EQUIVALENT CIRCUIT

PIN OUT

1	$V_{EXCITATION}$
2	COMMON
3	V_{OUTPUT}
4	V_{OFFSET}

CATALOG LISTINGS

(3)
(3)
XCA400.3GN
XCA401GN
XCA405GN
XCA415GN
(3)
XCA460GN
XCA4100GN
XCA4150GN
XCA405AN
XCA415AN
XCA430AN
XCA460AN
XCA4100AN
XCA4150AN
XCAL4004DN
XCAL4010DN
(4)
XCA401DN
XCA405DN
XCA415DN
XCA430DN
XCA460DN
XCA4100DN
XCA4150DN

UNLESS OTHERWISE SPECIFIED TOLERANCES ARE: [X] ENGLISH CUSTOMARY [ ] SI (mm) METRIC

NO PLACE	X	±.040	±1
ONE PLACE	.X	±.030	±0.4
TWO PLACE	.XX	±.015	±0.15
THREE PLACE	.XXX	±.005	±
ANGLES		±	±

RAW MATERIAL-COMMERCIAL STANDARD

THIRD ANGLE PROJECTION

DRAWN	SAV	04OCT00
CHECK	SAV	04OCT00

THIS DRAWING COVERS A PROPRIETARY ITEM AND IS THE PROPERTY OF HONEYWELL. THIS DRAWING IS NOT TO BE COPIED OR USED WITHOUT THE PERMISSION OF HONEYWELL.

DIMENSIONS ARE TO BE MET BEFORE PROTECTIVE COATINGS ARE APPLIED

PTC 3D ASME Y14.5M-1994

Honeywell

TITLE PRESSURE SENSOR -

SIZE	DWG TYPE	DRAWING NAME	REV
D	1	XCA4/XCAL4 SERIES CHART 1	4

SCALE 5:1 WEIGHT SHEET 1 OF 1