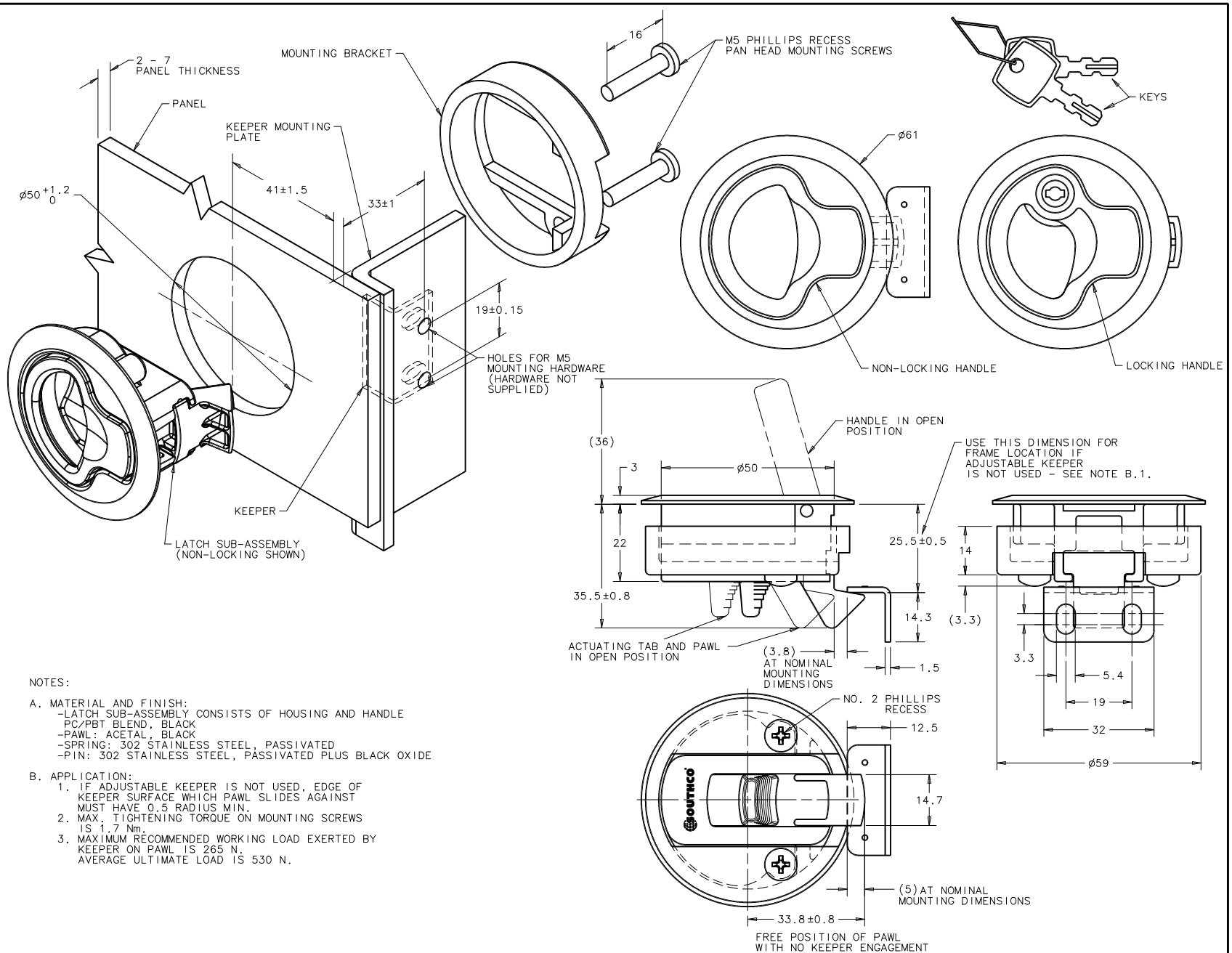

NOTES:

A. MATERIAL AND FINISH:
- LATCH SUB-ASSEMBLY CONSISTS OF HOUSING AND HANDLE PC/PBT BLEND, BLACK
- PAWL: ACETAL, BLACK
- SPRING: 302 STAINLESS STEEL, PASSIVATED
- PIN: 302 STAINLESS STEEL, PASSIVATED PLUS BLACK OXIDE

B. APPLICATION:
1. IF ADJUSTABLE KEEPER IS NOT USED, EDGE OF KEEPER SURFACE WHICH PAWL SLIDES AGAINST MUST HAVE 0.5 RADIUS MIN.
2. MAX. TIGHTENING TORQUE ON MOUNTING SCREWS IS 1.7 Nm.
3. MAXIMUM RECOMMENDED WORKING LOAD EXERTED BY KEEPER ON PAWL IS 265 N. AVERAGE ULTIMATE LOAD IS 530 N.

ITEM	PART NUMBER	MATERIAL	FINISH	REMARKS
ASSEMBLY	M1-41			LOCKABLE
ASSEMBLY	M1-61			NON-LOCKABLE
LATCH SUBASSEMBLY		SEE NOTE A	SEE NOTE A	
MOUNTING BRACKET		PC/PBT BLEND	BLACK	
KEEPER		304 STAINLESS STEEL	PASSIVATED	
MOUNTING SCREWS (2)		300 SERIES STAINLESS STEEL	PASSIVATED	

REV	DATE	DRAWN/CHKD	DESCRIPTION
G	21JAN2002	RJB/VNI	PRN:P2002-0017
H	06DEC2002	RLR/DLH	PRN:P2002-0935
I	17APR2004	MDY/AJH	PRN:P2004-0402

southco

PROPRIETARY ITEM - EXCEPT FOR USES EXPRESSLY GRANTED IN WRITING, INFORMATION DISCLOSED HEREON IS CONFIDENTIAL AND ALL RIGHTS PATENT AND OTHERWISE ARE RESERVED BY SOUTHCO, INC.

SOUTHCO FLUSH-PULL LATCH METRIC ASSEMBLY

DATE	DRAWN	CHKD	SCALE
31AUG92	JGK		1:1

DRAWING NUMBER: J-M1-61

MILLIMETERS

DIMENSIONAL TOLERANCE UNLESS OTHERWISE NOTED ±0.25

THIRD ANGLE PROJECTION

A3 PAPER SIZE