Alle Rechte vorbehalten/ *All rights reserved*

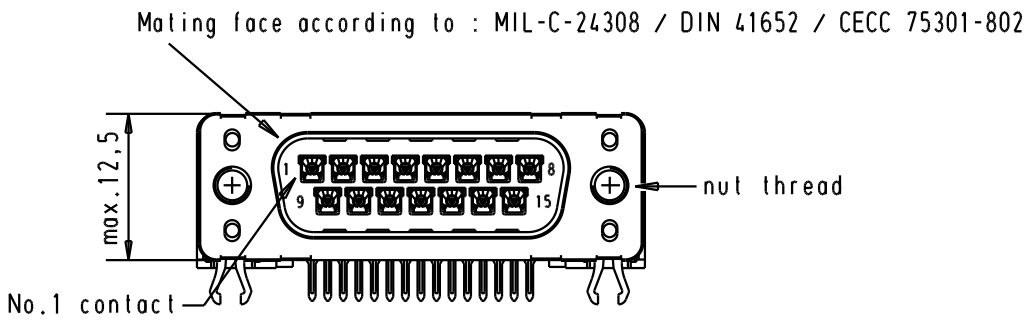

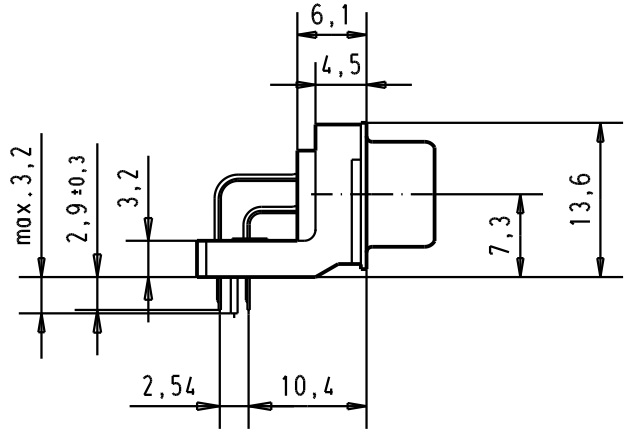

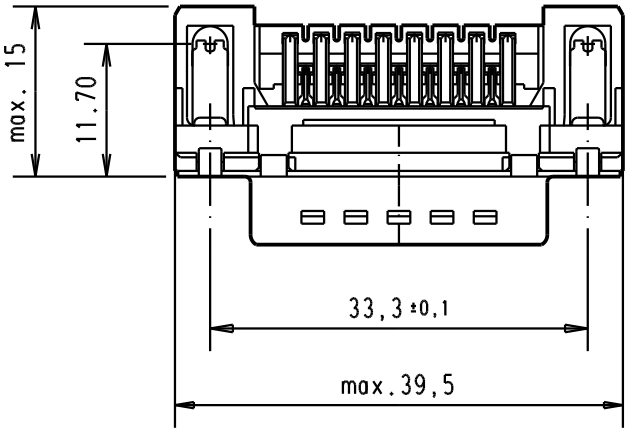

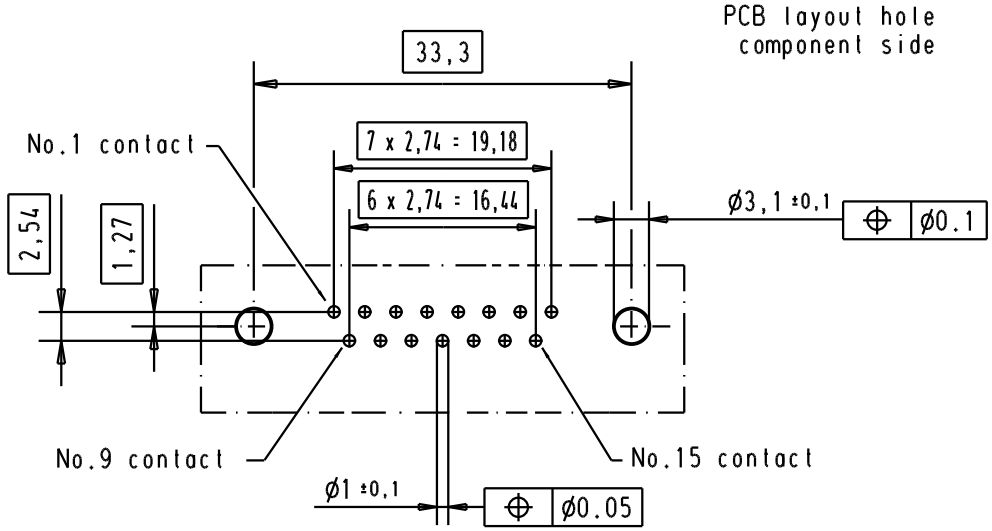

Connector retention and insertion forces on the PCB = 25 / 80 newtons

Part number	Nut thread	Performance level	Mod.	Dat.	Name
09 65 262 3811	M3	1			
09 65 262 6811	M3	2			
09 65 262 7811	M3	3	31892	22/04/04	JH
09 65 262 3812	4-40 UNC	1	31084	04/09/02	YT
09 65 262 6812	4-40 UNC	2	29689	02/07/01	AA
09 65 262 7812	4-40 UNC	3	27960	15/dec/00	ALSPACE

	Dat.	Name
Detail.	15/dec/00	ALSPACE
Insp.		
Stand.		

All Dim. in mm
Orig. Size DIN A 4

D-Sub, male, standard angle, 15 poles, with solder pin, nut and grounding board lock

Maßstab/ *Scale* 1.5:1

HARTING EURL
F-95972 Paris

TB 0965262x81x

Sub.

Blatt/ *Page* 5