PART NUMBER	ITEM ① BODY	ITEM ② CONTACT	ITEM ③ INSULATOR	ITEM ④ COUPLING DEVICE	ITEM ⑤ DE-COUPLING SLIDER	ITEM ⑥ END CAP	ITEM ⑦ CRIMP SLEEVE
146-0404-107	BRASS TRI-ALLOY PL .0001 MIN	BRASS GOLD PL .00005 MIN OVER NICKEL PL .00005 MIN OVER COPPER PL .00005 MIN	TEFLON	BERYLLIUM COPPER TRI-ALLOY PL .0001 MIN	BRASS TRI-ALLOY PL .0001 MIN	BRASS TRI-ALLOY PL .0001 MIN	COPPER TRI-ALLOY PL .0001 MIN

DRAWING NO.
C - 146-0404-101/110

REVISIONS

ENGINEERING RELEASE							
1	3-3-11	CWW	RB	TAK	MJU		3-3-11 ECO 53065

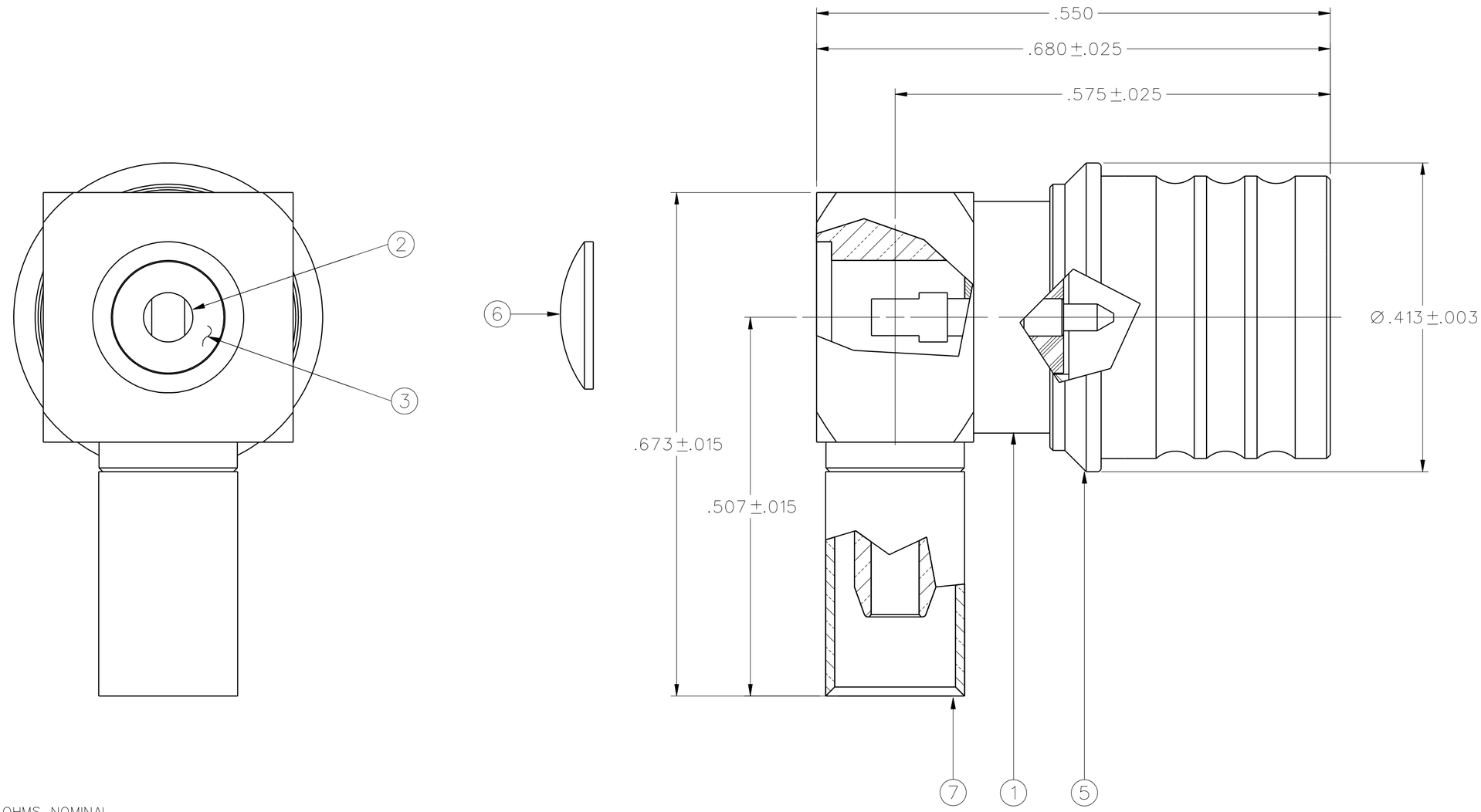

NOTES:

1. SPECIFICATIONS:

IMPEDANCE: 50 OHMS NOMINAL
FREQUENCY RANGE: 0-12.4 GHz
VSWR: 1.15 + 0.03F
WORKING VOLTAGE: 250 VRMS MAX AT SEA LEVEL
DIELECTRIC WITHSTANDING VOLTAGE: 750 VRMS MIN AT SEA LEVEL
INSULATION RESISTANCE: 5000 MEGOHM MIN
CONTACT RESISTANCE:
CENTER CONTACT - INITIAL 4.0 MILLIOHM MAX, AFTER ENVIRONMENTAL 6.0
OUTER CONDUCTOR - INITIAL 2.0 MILLIOHM MAX, AFTER ENVIRONMENTAL NOT APPLICABLE
CABLE BRAID TO CONNECTOR BODY - INITIAL 5.0 MILLIOHM MAX, AFTER ENVIRONMENTAL NOT APPLICABLE
CORONA LEVEL: 190 VOLTS MIN AT 70,000 FEET
INSERTION LOSS: $.15\sqrt{F}$ (F IN GHz) AT 6 GHz
RF LEAKAGE: -80 DB MIN AT 3.0 GHz
RF HIGH POTENTIAL WITHSTANDING VOLTAGE: 500 VRMS MIN AT 4 AND 7 MHz

MECHANICAL:

ENGAGE FORCE: 5.6 POUNDS TYPICAL
DISENGAGE FORCE: 4.5 POUNDS TYPICAL
COUPLING RETENTION FORCE: 10 POUNDS MIN
CONTACT RETENTION: 6 LBS MIN
CABLE ACCEPTABILITY: RG 188/U DOUBLE SHIELDED, RG 316/U DOUBLE SHIELDED.
CABLE HEX CRIMP SIZE: .151
CABLE RETENTION: 20 LBS MIN AXIAL FORCE
DURABILITY: 500 CYCLES MIN

ENVIRONMENTAL:

THERMAL SHOCK: MIL-STD-202, METHOD 107, CONDITION B EXCEPT +85°C HIGH TEMP
OPERATING TEMPERATURE: -65 DEG C TO +165 DEG C
CORROSION: MIL-STD-202, METHOD 101, CONDITION B
SHOCK: MIL-STD-202, METHOD 213, CONDITION I
VIBRATION: MIL-STD-202, METHOD 204, CONDITION D
MOISTURE RESISTANCE: MIL-STD-202, METHOD 106

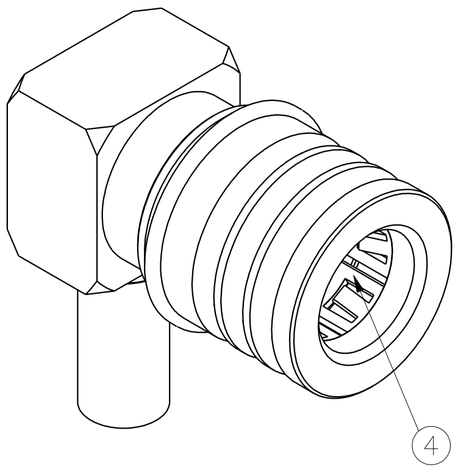

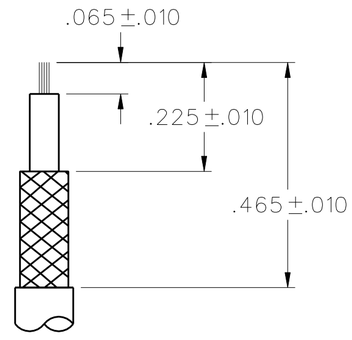

CABLE STRIP DIMENSIONS

4:1

CUSTOMER DRAWING

THIS DRAWING TO BE INTERPRETED PER ASME Y 14.5M - 1994

"μSTATION"

COMPANY CONFIDENTIAL

TOLERANCE UNLESS OTHERWISE SPECIFIED		DRAWN BY T.A.Kari	DATE 4-09-08	EMERSON. Network Power	Connectivity Solutions P.O. Box 1732 Waseca, MN 56093 1-800-247-8256
DECIMALS .XX	mm	CHECKED BY CWW	DATE 3-7-11	TITLE RA PLUG KWIQMATE CONNECTOR CRIMP TYPE, RG-316 DOUBLE SHIELDED	
.XXX ±.003		APPROVED BY T.A. KARI	DATE 3-7-11		
MATL		RELEASE DATE	3-7-11	SHEET 2 OF 2	DRAWING NO. C - 146-0404-101/110
FINISH		U/M INCH	SCALE 10:1		