P.C. BOARD THICKNESS	DIM. "D" (MTG. PEGS)	DIM. "F" (P.C. TAILS)
0.062"	.128 (3.25)	.120 +.015/-.025 (3.05 +.38/-.63)
0.125"	.191 (4.85)	.205 +.015/-.025 (5.21 +.38/-.63)

CONNECTOR SIZE	CIRCUIT SIZE	DIM. "G"
4	4	.150 (3.81)
4	2	.050 (1.27)

NOTES:
1) MATERIALS: HOUSING PARTS ARE MADE OF POLYESTER, RATED U.L. 94 V-0, COLOR IS BLACK, TERMINALS ARE .015/(0.38) THICK PHOSPHOR BRONZE.
2) TERMINAL PLATING OPTIONS PER ES-88-***:
   A - SELECT GOLD IN CONTACT AREA: 50 MICROINCHES MIN.,
   SELECT MATTE TIN IN PC TAIL AREA: 100 MICROINCHES MIN.,
   WITH OVERALL NICKEL UNDERPLATE: 50 MICROINCHES MIN.
3) THESE MODULAR JACKS MEET THE PERFORMANCE REQUIREMENTS OF MOLEX PRODUCT SPECIFICATION PS-42410.
4) CONNECTORS ARE TO BE PACKED IN THERMOFORMED TRAYS, PER PACKAGING SPECIFICATION PK-42410-492.
5) ALL JACKS ARE DESIGNED TO BE USED WITH .062/(1.57) OR .125/(3.18) THICK P.C. BOARDS.
6) ALL JACKS CONFORM TO AND ACCEPT PLUGS WHICH CONFORM TO FCC RULES AND REGULATIONS PART 68, SUBPART F, WHEN PLATED WITH 50 MICROINCHES GOLD.
7) ALL JACKS MUST BE CAPABLE OF FITTING INTO MOLEX GAGE G-42410 (CONNECTOR SIZE 4).
8) SEE SHEETS 2 & 4 FOR CONNECTOR SIZE 6.
9) SEE SHEETS 3 & 4 FOR CONNECTOR SIZE 8.
10) SEE SHEET 4 FOR ASSEMBLY ITEM NUMBERS.
11) THIS MODULAR JACK ASSEMBLY IS ALSO AVAILABLE IN A UL 94V-0 RATED, GLASS-FILLED NYLON. (SEE MOLEX DRAWING SDA-43576)
12) ENGRAVED NUMBERS ON HOUSING BODY ARE FOR MOLDING IDENTIFICATON ONLY. THEY ARE NOT INTENDED FOR ASSEMBLY IDENTIFICATION PURPOSES.
13) ALL UNTOLERANCED DIMENSIONS ARE SHOWN FOR REFERENCE ONLY.

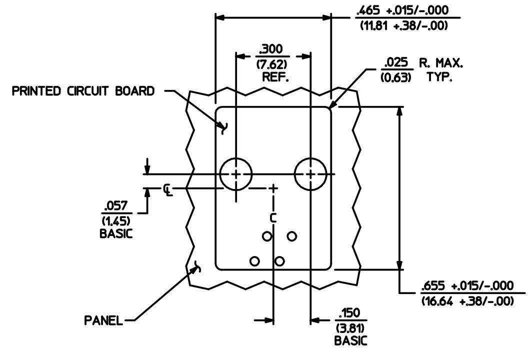

PANEL CUT-OUT FOR CONNECTOR SIZE 4

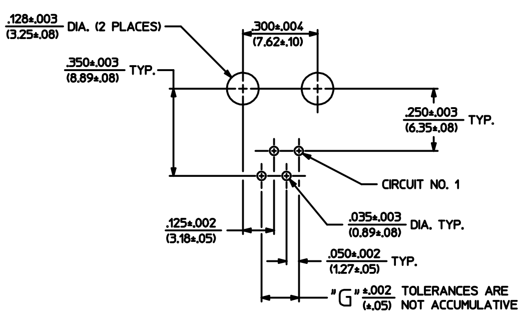

P.C. BOARD LAYOUT FOR CONNECTOR SIZE 4

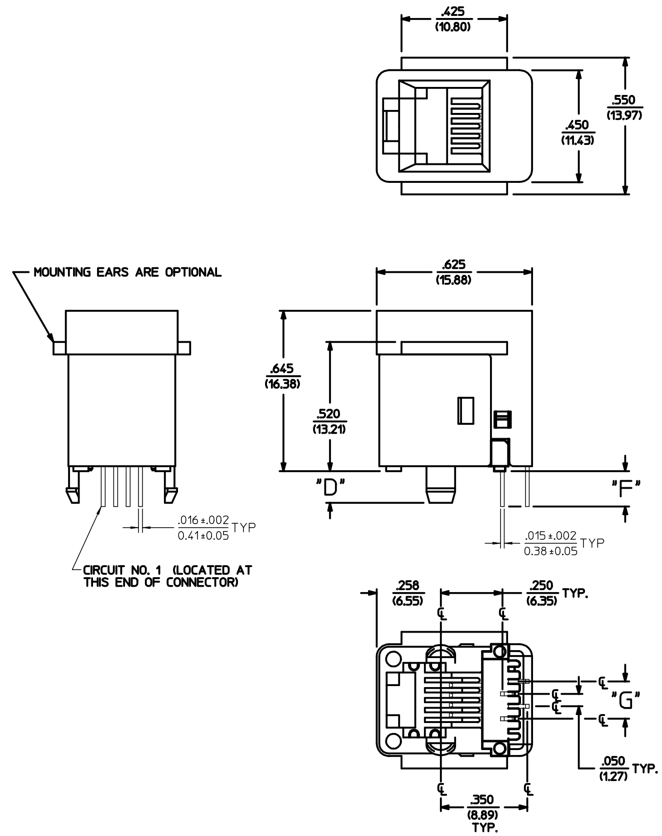

SIZE 4 MODULAR JACK LOADED WITH 4 TERMINALS SHOWN ABOVE
(SEE SHEET 4 FOR PART NUMBER AVAILABILITY)

REV	DESCRIPTION		
N1	ADD TERMINAL DIM	EC NO: UCP2011-3830	2011/06/06
		DRWN: JJAGUILAR	2011/06/09
		CH'KD: JBELL	2012/02/14
		APPR: FSMITH	

QUALITY SYMBOLS: ∇ =0

GENERAL TOLERANCES (UNLESS SPECIFIED)	mm	INCH
4 PLACES	± ---	± ---
3 PLACES	± ---	± .010
2 PLACES	± 0.25	± ---
1 PLACE	± ---	± ---
ANGULAR ±1/2°		

DRAFT WHERE APPLICABLE MUST REMAIN WITHIN DIMENSIONS

DIMENSION STYLE: IN/MM | SCALE: 4:1 | DESIGN UNITS: INCH | THIRD ANGLE PROJECTION

		DATE
DRAWN BY	GLT	1990/10/12
CHECKED BY	BAP	1990/10/12
APPROVED BY	FSMITH	2012/02/14

TITLE: ASSEMBLY; VERTICAL MODULAR JACKS (CONNECTOR SIZE 4)

MOLEX INCORPORATED

MATERIAL NO.: SEE SHEET 4 | DOCUMENT NO.: SDA-42410-**** | SHEET NO.: 1 OF 4

SIZE: D

THIS DRAWING CONTAINS INFORMATION THAT IS PROPRIETARY TO MOLEX INCORPORATED AND SHOULD NOT BE USED WITHOUT WRITTEN PERMISSION

tb_frame_D_P_ME_T
Rev. F 2009/06/18

NOTES:
1) MATERIALS: HOUSING PARTS ARE MADE OF POLYESTER, RATED U.L. 94 V-0, COLOR IS BLACK. TERMINALS ARE .015/(0.38) THICK PHOSPHOR BRONZE.
2) TERMINAL PLATING OPTIONS PER ES-88-***:
   A - SELECT GOLD IN CONTACT AREA: 50 MICROINCHES MIN., SELECT MATTE TIN IN PC TAIL AREA: 100 MICROINCHES MIN., WITH OVERALL NICKEL UNDERPLATE: 50 MICROINCHES MIN.
   B - SELECT GOLD IN CONTACT AREA: 15 MICROINCHES MIN., SELECT MATTE TIN IN PC TAIL AREA: 100 MICROINCHES MIN., WITH OVERALL NICKEL UNDERPLATE: 50 MICROINCHES MIN.
3) THESE MODULAR JACKS MEET THE PERFORMANCE REQUIREMENTS OF MOLEX PRODUCT SPECIFICATION PS-42410.
4) CONNECTORS ARE TO BE PACKED IN THERMOFORMED TRAYS, PER PACKAGING SPECIFICATION PK-42410-492.
5) ALL JACKS ARE DESIGNED TO BE USED WITH .062/(1.57) OR .125/(3.18) THICK P.C. BOARDS.
6) ALL JACKS CONFORM TO AND ACCEPT PLUGS WHICH CONFORM TO FCC RULES AND REGULATIONS PART 68, SUBPART F, WHEN PLATED WITH 50 MICROINCHES GOLD.
7) ALL JACKS MUST BE CAPABLE OF FITTING INTO MOLEX GAGE G-42410 (CONNECTOR SIZE 4).
8) SEE SHEETS 1 & 4 FOR CONNECTOR SIZE 4.
9) SEE SHEETS 3 & 4 FOR CONNECTOR SIZE 8.
10) SEE SHEET 4 FOR ASSEMBLY ITEM NUMBERS.
11) THIS MODULAR JACK ASSEMBLY IS ALSO AVAILABLE IN A UL 94V-0 RATED, GLASS-FILLED NYLON. (SEE MOLEX DRAWING SDA-43576)
12) ENGRAVED NUMBERS ON HOUSING BODY ARE FOR MOLDING IDENTIFICATON ONLY, THEY ARE NOT INTENDED FOR ASSEMBLY IDENTIFICATION PURPOSES.
13) ALL UNTOLERANCED DIMENSIONS ARE SHOWN FOR REFERENCE ONLY.

P.C. BOARD THICKNESS	DIM. "D" (MTG. PEGS)	DIM. "F" (P.C. TAILS)
0.062/(1.57)	.128 (3.25)	.120 +.015/-.025 (3.05 +.38/-.63)
0.125/(3.18)	.191 (4.85)	.205 +.015/-.025 (5.21 +.38/-.63)

CONNECTOR SIZE	CIRCUIT SIZE	DIM. "G"
6	6	.250 (6.35)
6	4	.150 (3.81)
6	2	.050 (1.27)

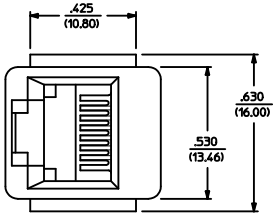

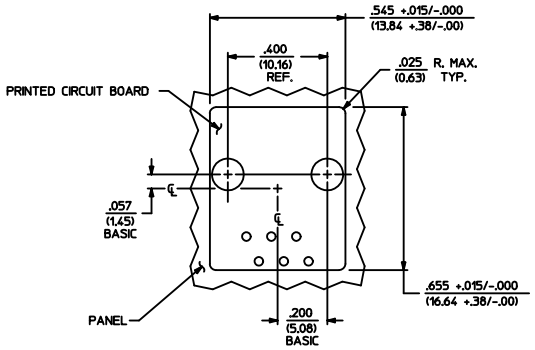

PANEL CUT-OUT FOR CONNECTOR SIZE 6

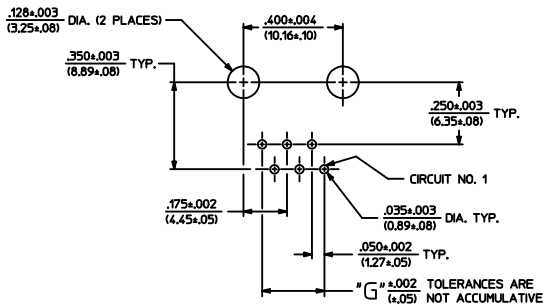

P.C. BOARD LAYOUT FOR CONNECTOR SIZE 6

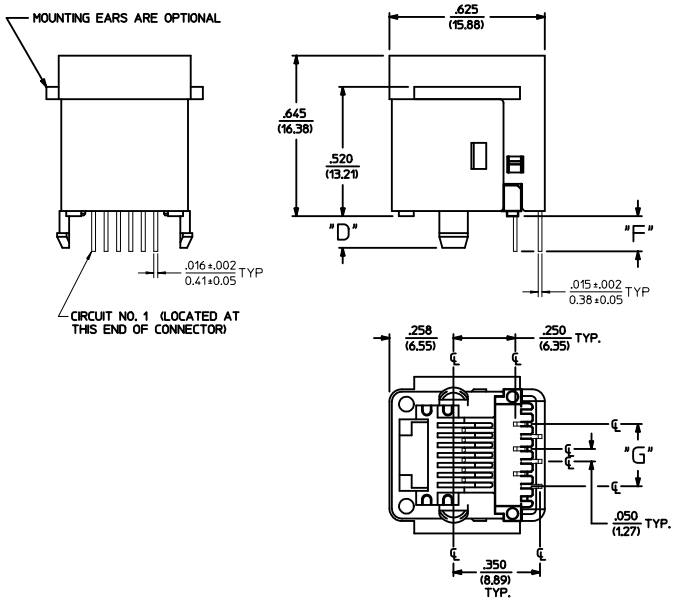

SIZE 6 MODULAR JACK LOADED WITH 6 TERMINALS SHOWN ABOVE

(SEE SHEET 4 FOR PART NUMBER AVAILABILITY)

SEE SHEET 1 EC NO: UCP2011-3830 DRWN:J.AGUILAR 2011/06/06 CHKD:J.BELL 2011/06/09 APPR:F.SMITH 2012/02/14	QUALITY SYMBOLS	GENERAL TOLERANCES (UNLESS SPECIFIED) mm / INCH	DIMENSION STYLE IN/MM	SCALE 4:1	DESIGN UNITS INCH	THIRD ANGLE PROJECTION	
		4 PLACES ±--- / ±---	DRAWN BY GLT DATE 1990/10/12	TITLE ASSEMBLY; VERTICAL MODULAR JACKS (CONNECTOR SIZE 4)			
		3 PLACES ±--- / ±.010	CHECKED BY BAP DATE 1990/10/12				
		2 PLACES ±0.25 / ±---	APPROVED BY FSMITH DATE 2012/02/14	MOLEX INCORPORATED			
		1 PLACE ±--- / ±---					
		ANGULAR ±1/2°					
		DRAFT WHERE APPLICABLE MUST REMAIN WITHIN DIMENSIONS	MATERIAL NO. SEE SHEET 4	DOCUMENT NO. SDA-42410-****		SHEET NO. 2 OF 4	
N1	REV	DESCRIPTION	SIZE D	THIS DRAWING CONTAINS INFORMATION THAT IS PROPRIETARY TO MOLEX INCORPORATED AND SHOULD NOT BE USED WITHOUT WRITTEN PERMISSION			

tb_frame_D_P_AM_T
Rev. F 2009/06/17

NOTES:
1) MATERIALS: HOUSING PARTS ARE MADE OF POLYESTER, RATED U.L. 94 V-0, COLOR IS BLACK, TERMINALS ARE .015/(0.38) THICK PHOSPHOR BRONZE.
2) TERMINAL PLATING OPTIONS PER ES-88-***:
   A - SELECT GOLD IN CONTACT AREA: 50 MICROINCHES MIN.,
   SELECT MATTE TIN IN PC TAIL AREA: 100 MICROINCHES MIN.,
   WITH OVERALL NICKEL UNDERPLATE: 50 MICROINCHES MIN.
3) THESE MODULAR JACKS MEET THE PERFORMANCE REQUIREMENTS OF MOLEX PRODUCT SPECIFICATION PS-42410.
4) CONNECTORS ARE TO BE PACKED IN THERMOFORMED TRAYS, PER PACKAGING SPECIFICATION PK-42410-492.
5) ALL JACKS ARE DESIGNED TO BE USED WITH .062/(1.57) OR .125/(3.18) THICK P.C. BOARDS.
6) ALL JACKS CONFORM TO AND ACCEPT PLUGS WHICH CONFORM TO FCC RULES AND REGULATIONS PART 68, SUBPART F. WHEN PLATED WITH 50 MICROINCHES GOLD.
7) ALL JACKS MUST BE CAPABLE OF FITTING INTO MOLEX GAGE G-42410 (CONNECTOR SIZE 4).
8) SEE SHEETS 1 & 4 FOR CONNECTOR SIZE 4.
9) SEE SHEETS 2 & 4 FOR CONNECTOR SIZE 6.
10) SEE SHEET 4 FOR ASSEMBLY ITEM NUMBERS.
11) THIS MODULAR JACK ASSEMBLY IS ALSO AVAILABLE IN A UL 94V-0 RATED, GLASS-FILLED NYLON. (SEE MOLEX DRAWING SDA-43576)
12) ENGRAVED NUMBERS ON HOUSING BODY ARE FOR MOLDING IDENTIFICATON ONLY. THEY ARE NOT INTENDED FOR ASSEMBLY IDENTIFICATION PURPOSES.
13) ALL UNTOLERANCED DIMENSIONS ARE SHOWN FOR REFERENCE ONLY.

P.C. BOARD THICKNESS	DIM. "D" (MTG. PEGS)	DIM. "F" (P.C. TAILS)
.062/(1.57)	.128 (3.25)	.120 +.015/-.025 (3.05 +.38/-.63)
.125/(3.18)	.191 (4.85)	.205 +.015/-.025 (5.21 +.38/-.63)

CONNECTOR SIZE	CIRCUIT SIZE	DIM. "G"
8	8	.350 (8.89)
8	6	.250 (6.35)
8	4	.150 (3.81)
8	2	.050 (1.27)

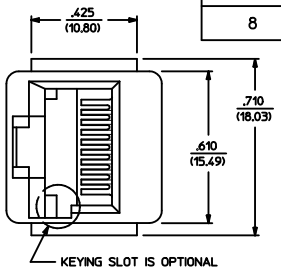

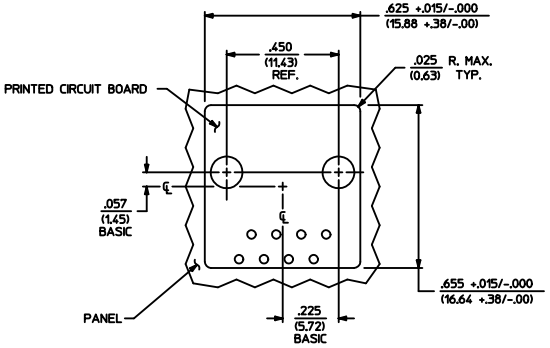

PANEL CUT-OUT FOR CONNECTOR SIZE 8

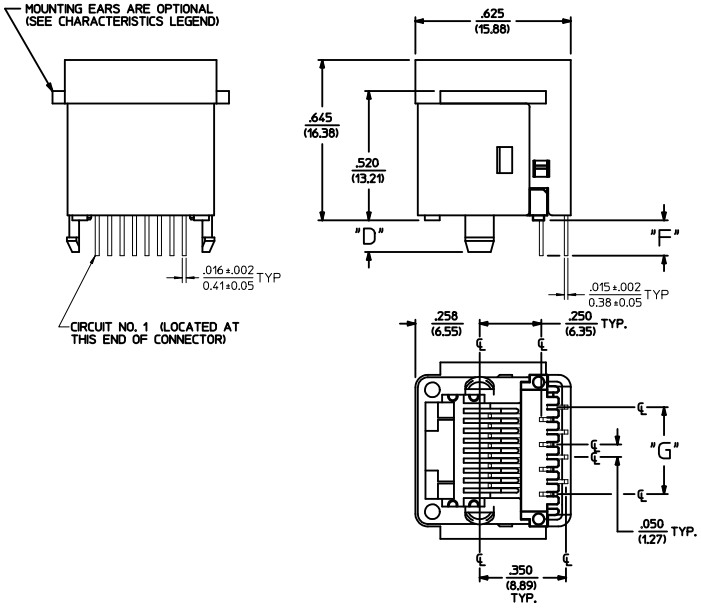

SIZE 8 MODULAR JACK LOADED WITH 8 TERMINALS SHOWN ABOVE

(SEE SHEET 4 FOR PART NUMBER AVAILABILITY)

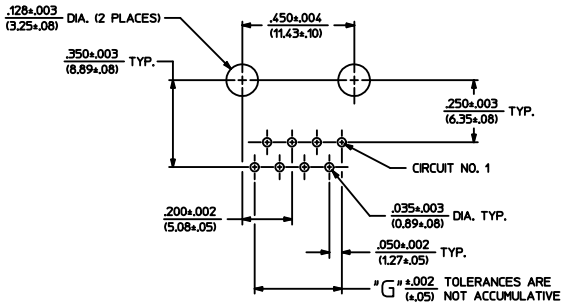

P.C. BOARD LAYOUT FOR CONNECTOR SIZE 8

SEE SHEET 1 EC NO: UCP2011-3830 DRWN:J JAGUILAR 2011/06/06 CHKD:J BELL 2011/06/09 APPR:F SMITH 2012/02/14	QUALITY SYMBOLS	GENERAL TOLERANCES (UNLESS SPECIFIED) mm / INCH	DIMENSION STYLE IN/MM	SCALE 4:1	DESIGN UNITS INCH	THIRD ANGLE PROJECTION	
		4 PLACES ±--- / ±---	DRAWN BY GLT DATE 1990/10/12	TITLE ASSEMBLY; VERTICAL MODULAR JACKS (CONNECTOR SIZE 4)			
		3 PLACES ±--- / ±.010	CHECKED BY BAP DATE 1990/10/12				
		2 PLACES ±0.25 / ±---	APPROVED BY FSMITH DATE 2012/02/14	molex MOLEX INCORPORATED			
		1 PLACE ±--- / ±---					
		ANGULAR ±1/2°					
		DRAFT WHERE APPLICABLE MUST REMAIN WITHIN DIMENSIONS	MATERIAL NO. SEE SHEET 4	DOCUMENT NO. SDA-42410-****		SHEET NO. 3 OF 4	
N1	REV	DESCRIPTION	SIZE D	THIS DRAWING CONTAINS INFORMATION THAT IS PROPRIETARY TO MOLEX INCORPORATED AND SHOULD NOT BE USED WITHOUT WRITTEN PERMISSION			

tb_frame_D_P_AM_T Rev. F 2009/06/17

SIZE 4 VERTICAL MODJACK ASSEMBLIES

"X"-NOT TOOLED	ASSEMBLY ITEM NUMBER	PART CHARACTERISTICS: EXTERNAL CONNECTOR SIZE	NUMBER OF POSITIONS	P.C. BOARD THICKNESS	MOUNTING EARS OPTION	TERMINAL PLATING OPTION
	42410-4168	4 POS. BODY	4	.062/(1.57)	YES	A
	42410-4170	↑	↑	.062/(1.57)	NO	A
	42410-4264	↓	↓	.125/(3.18)	YES	A
	42410-4266	4 POS. BODY	4	.125/(3.18)	NO	A
	42410-4312	4 POS. BODY	2	.062/(1.57)	YES	A
	42410-4314	↑	↑	.062/(1.57)	NO	A
	42410-4408	↓	↓	.125/(3.18)	YES	A
	42410-4410	4 POS. BODY	2	.125/(3.18)	NO	A

SIZE 6 VERTICAL MODJACK ASSEMBLIES

"X"-NOT TOOLED	ASSEMBLY ITEM NUMBER	PART CHARACTERISTICS: EXTERNAL CONNECTOR SIZE	NUMBER OF POSITIONS	P.C. BOARD THICKNESS	MOUNTING EARS OPTION	TERMINAL PLATING OPTION
	42410-6168	6 POS. BODY	6	.062/(1.57)	YES	A
	42410-6170	↑	↑	.062/(1.57)	NO	A
	42410-6264	↓	↓	.125/(3.18)	YES	A
	42410-6266	6 POS. BODY	6	.125/(3.18)	NO	A
	42410-6312	6 POS. BODY	4	.062/(1.57)	YES	A
	42410-6314	↑	↑	.062/(1.57)	NO	A
	42410-6320			.062/(1.57)	YES	B
	42410-6408	↓	↓	.125/(3.18)	YES	A
	42410-6410	6 POS. BODY	4	.125/(3.18)	NO	A
	42410-6456	6 POS. BODY	2	.062/(1.57)	YES	A
	42410-6458	↑	↑	.062/(1.57)	NO	A
	42410-6552	↓	↓	.125/(3.18)	YES	A
	42410-6554	6 POS. BODY	2	.125/(3.18)	NO	A

SIZE 8 VERTICAL MODJACK ASSEMBLIES

"X"-NOT TOOLED	ASSEMBLY ITEM NUMBER	PART CHARACTERISTICS: EXTERNAL CONNECTOR SIZE	NUMBER OF POSITIONS	P.C. BOARD THICKNESS	KEYING OPTION	MOUNTING EARS OPTION	TERMINAL PLATING OPTION
	42410-8312	8 POS. BODY	8	.062/(1.57)	NO	YES	A
	42410-8314	↑	↑	.062/(1.57)	NO	NO	A
	42410-8360			.062/(1.57)	YES	YES	A
	42410-8362			.062/(1.57)	YES	NO	A
	42410-8504			.125/(3.18)	NO	YES	A
	42410-8506			.125/(3.18)	NO	NO	A
	42410-8552	↓	↓	.125/(3.18)	YES	YES	A
	42410-8554	8 POS. BODY	8	.125/(3.18)	YES	NO	A
	42410-8600	8 POS. BODY	6	.062/(1.57)	NO	YES	A
	42410-8602	↑	↑	.062/(1.57)	NO	NO	A
	42410-8648			.062/(1.57)	YES	YES	A
	42410-8650			.062/(1.57)	YES	NO	A
	42410-8792			.125/(3.18)	NO	YES	A
	42410-8794			.125/(3.18)	NO	NO	A
	42410-8840	↓	↓	.125/(3.18)	YES	YES	A
	42410-8842	8 POS. BODY	6	.125/(3.18)	YES	NO	A
	42410-8888	8 POS. BODY	4	.062/(1.57)	NO	YES	A
	42410-8890	↑	↑	.062/(1.57)	NO	NO	A
	42410-8936			.062/(1.57)	YES	YES	A
	42410-8938			.062/(1.57)	YES	NO	A
	42410-9080			.125/(3.18)	NO	YES	A
	42410-9082			.125/(3.18)	NO	NO	A
	42410-9128	↓	↓	.125/(3.18)	YES	YES	A
	42410-9130	8 POS. BODY	4	.125/(3.18)	YES	NO	A
	42410-9176	8 POS. BODY	2	.062/(1.57)	NO	YES	A
	42410-9178	↑	↑	.062/(1.57)	NO	NO	A
	42410-9224			.062/(1.57)	YES	YES	A
	42410-9226			.062/(1.57)	YES	NO	A
	42410-9368			.125/(3.18)	NO	YES	A
	42410-9370			.125/(3.18)	NO	NO	A
	42410-9416	↓	↓	.125/(3.18)	YES	YES	A
	42410-9418	8 POS. BODY	2	.125/(3.18)	YES	NO	A

SEE SHEET 1
EC NO: UCP2011-3830 2011/06/06
DRWN:J JAGUILAR 2011/06/09
CHKD:BELL
APPR:FSMITH 2012/02/14
DESCRIPTION
REV
N1

QUALITY SYMBOLS
=0
=0
=0

GENERAL TOLERANCES (UNLESS SPECIFIED)

	mm	INCH
4 PLACES	± ---	± ---
3 PLACES	± ---	± .010
2 PLACES	± 0.25	± ---
1 PLACE	± ---	± ---
ANGULAR ±1/2°		

DRAFT WHERE APPLICABLE MUST REMAIN WITHIN DIMENSIONS

DIMENSION STYLE: IN/MM
SCALE: 1:1
DESIGN UNITS: INCH
THIRD ANGLE PROJECTION

DRAWN BY: GLT DATE: 1990/10/12
CHECKED BY: BAP DATE: 1990/10/12
APPROVED BY: FSMITH DATE: 2012/02/14
MATERIAL NO.: SEE CHART

TITLE: ASSEMBLY; VERTICAL MODULAR JACKS (CONNECTOR SIZE 4)

MOLEX INCORPORATED

DOCUMENT NO.: SDA-42410-****
SHEET NO.: 4 OF 4
SIZE: D

THIS DRAWING CONTAINS INFORMATION THAT IS PROPRIETARY TO MOLEX INCORPORATED AND SHOULD NOT BE USED WITHOUT WRITTEN PERMISSION