REV.	DESCRIPTION	DATE	APPROVED
G	Engineering Release.	10/03/12	T. Y.

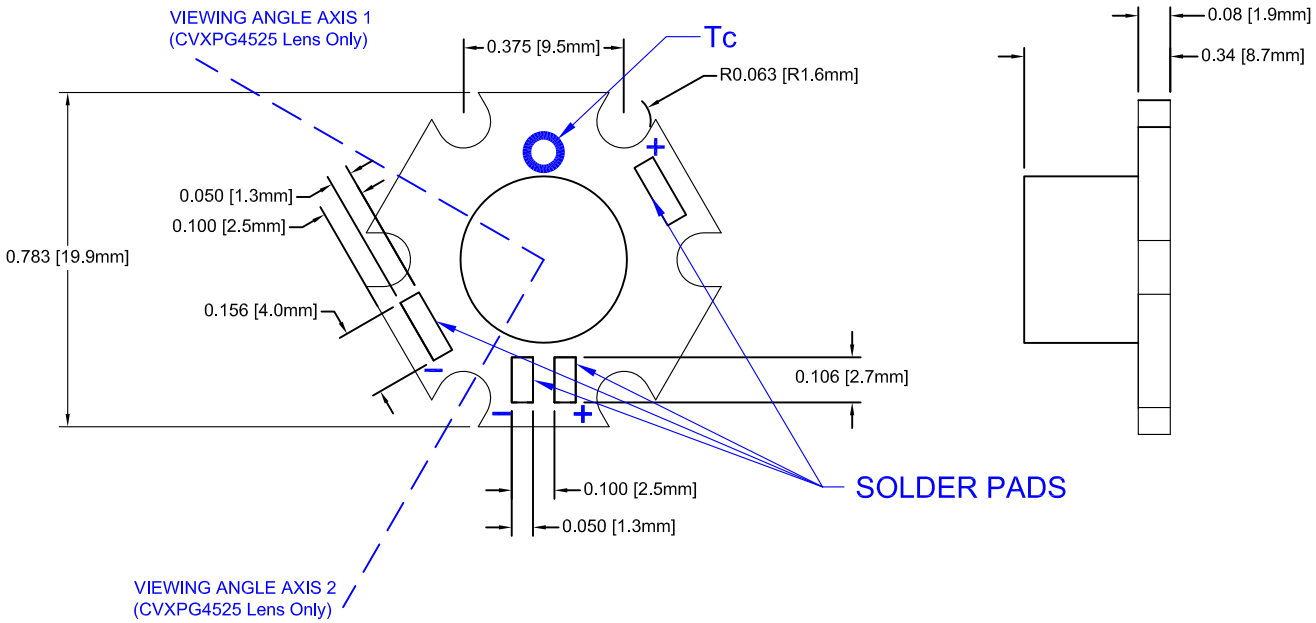

Table 1: Typical Characteristics without Additional Heat Sink						
Part Number	CCT (K)	CRI	Typical Luminous Flux @ If = 350mA, Tc=70C (lm)	Typical Luminous Flux @ If = 600mA, Tc=100C (lm)	Typical DC Forward Current, Vf (V)	Viewing Angle, Axis 1 / Axis2 (°)
L2-PGC1-S	6500	75	97	152	2.9 ~ 3.0	85
L2-PGC2-S	6500	75	97	152	2.9 ~ 3.0	35
L2-PGC3-S	6500	75	97	152	2.9 ~ 3.0	45 / 25
L2-PGN1-S	4100	75	91	142	2.9 ~ 3.0	85
L2-PGN2-S	4100	75	91	142	2.9 ~ 3.0	35
L2-PGN3-S	4100	75	91	142	2.9 ~ 3.0	45 / 25
L2-PGW1-S	3100	80	80	125	2.9 ~ 3.0	85
L2-PGW2-S	3100	80	80	125	2.9 ~ 3.0	35
L2-PGW3-S	3100	80	80	125	2.9 ~ 3.0	45 / 25

Table 2: Absolute Maximum Ratings with Thermal Management						
Part Number	CCT (K)	CRI	Typical Luminous Flux @ If = 1000mA, Tc=120C (lm)	Typical Luminous Flux @ If = 1500mA, Tc=100C (lm)	Typical DC Forward Current, Vf (V)	Viewing Angle, Axis 1 / Axis2 (°)
L2-PGC1-S	6500	75	216	660	3.2 ~ 3.3	85
L2-PGC2-S	6500	75	216	660	3.2 ~ 3.3	35
L2-PGC3-S	6500	75	216	660	3.2 ~ 3.3	45 / 25
L2-PGN1-S	4100	75	186	566	3.2 ~ 3.3	85
L2-PGN2-S	4100	75	186	566	3.2 ~ 3.3	35
L2-PGN3-S	4100	75	186	566	3.2 ~ 3.3	45 / 25
L2-PGW1-S	3100	80	155	472	3.2 ~ 3.3	85
L2-PGW2-S	3100	80	155	472	3.2 ~ 3.3	35
L2-PGW3-S	3100	80	155	472	3.2 ~ 3.3	45 / 25

STANDARD TOLERANCE
(UNLESS OTHERWISE SPECIFIED)

DECIMALS		ANGULAR	
.X	± .1	X°	± 1°
.XX	± .02		
.XXX	± .010		

BIVAR®
4 THOMAS, IRVINE, CA. 92618
TEL: (949) 951-8808 FAX: (949) 951-3974

TITLE: L2 Starboard Light Engine

DESIGNED:	DATE:	PART NO:	REVISION:
Brian Oliver	11/02/11	L2-PGXX-S	G
CHECKED: M. Chen	DATE: 11/02/11	CAGE CODE : 32559	SHEET # 1 OF 1

CAD GENERATED DOCUMENT, DO NOT MEASURE DRAWING.