| REVISIONS | | |
|---|---|---|
| ISS | ZONE | DESCRIPTION\PER REQUEST\DATE |
| | | |

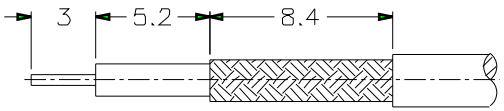


RECOMMENDED
CABLE STRIPPING DIM'S

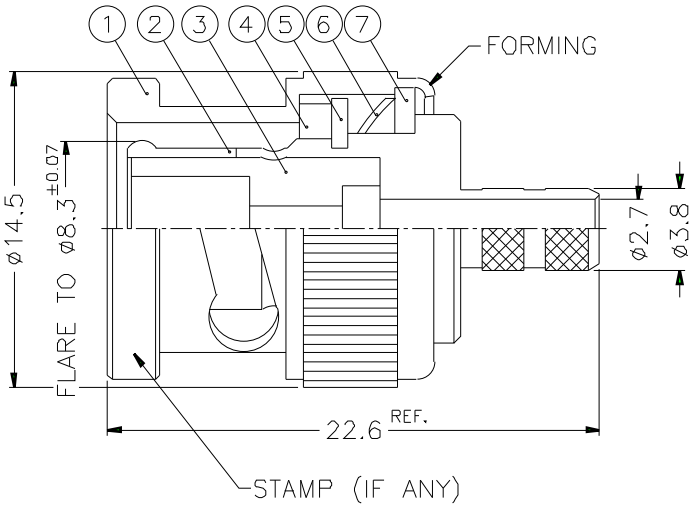


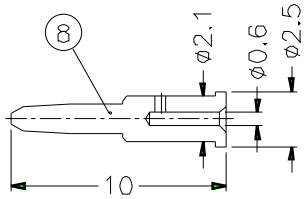


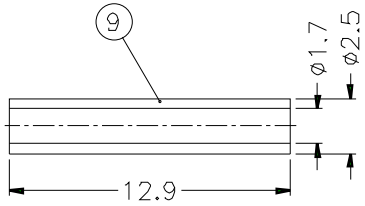


NOTES: FINISH (PLATING THICKNESS IN MICRO-INCHES)
1. BRASS PER QQ-B-626
2. BRASS PER QQ-B-613
3. NICKEL PL. 100 MIN. THICK OVER COPPER STRIKE
4. NICKEL PL. 200 MIN. THICK OVER COPPER STRIKE
5. GOLD PL. 3 MIN. THICK OVER NICKEL PL. 100 MIN. THICK OVER COPPER STRIKE
6. JIS H 3260, C 3501

1. CRIMPED FERRULE
HEX CRIMP SIZE .178"
2. CRIMPED CONTACT PIN
HEX CRIMP SIZE .068"

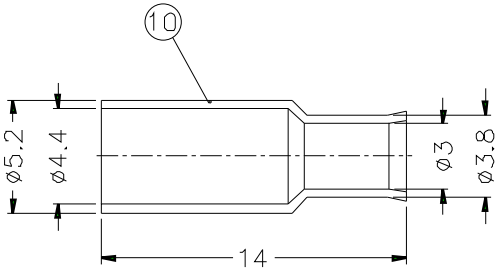


| NO. | DESCRIPTION | MATERIAL | FINISH | Q'TY | DRAWING NO. |
|---|---|---|---|---|---|
| 10 | FERRULE | NOTE 6 | NOTE 3 | 1 | FR-52/44-38/3X 14 |
| 9 | SLEEVE | DELRIN | NATURAL | 1 | SL-25/17X129 |
| 8 | CONTACT PIN | NOTE 1 | NOTE 5 | 1 | B3000-8-25/06 |
| 7 | WASHER | NOTE 2 | NOTE 3 | 1 | WS-128/9X08 |
| 6 | SPRING | SK5 | NOTE 4 | 1 | B50000-6 |
| 5 | RETAINER RING | NOTE 1 | NOTE 3 | 1 | B50000-5 |
| 4 | GASKET | RUBBER | RED | 1 | GS-115/8X15 |
| 3 | INSULATOR | DELRIN | NATURAL | 1 | B50002-3-50 |
| 2 | BODY | NOTE 1 | NOTE 3 | 1 | B50002-2-38/27 |
| 1 | SHELL | NOTE 1 | NOTE 3 | 1 | B50000-1-B |

DIMENSIONS ARE IN MILLIMETERS

UNLESS OTHERWISE SPECIFIED TOLERANCES
0.5-6 = ±0.2
6-30 = ±0.4
30-120 = ±0.6
120-315 = ±1
315-1000 = ±1 6
1000-2000 = ±2 4

SCALE 3/1 ISSUE A

PART NO. B1121E1-ND3G-5-50

APPROVED DATE 10-11-01'

CHECKED DATE 10-11-01'

DRAWN DATE 10-11-01'

FILE NO.

**Amphenol**

TITLE BNC CRIMP PLUG (FOR RG-174/U,188A/U,316/U)

DRAWING NO. KJ-B1121E1-ND3G-316U-50

ITEM NO.