THIS DRAWING IS UNPUBLISHED. RELEASED FOR PUBLICATION N/A ,N/A .
© COPYRIGHT N/A By – ALL RIGHTS RESERVED.

LOC	DIST
DF	A0

REVISIONS

P	LTR	DESCRIPTION	DATE	DWN	APVD
	D1	REVISED PER ECO-11-005030	11MAR11	RK	HMR

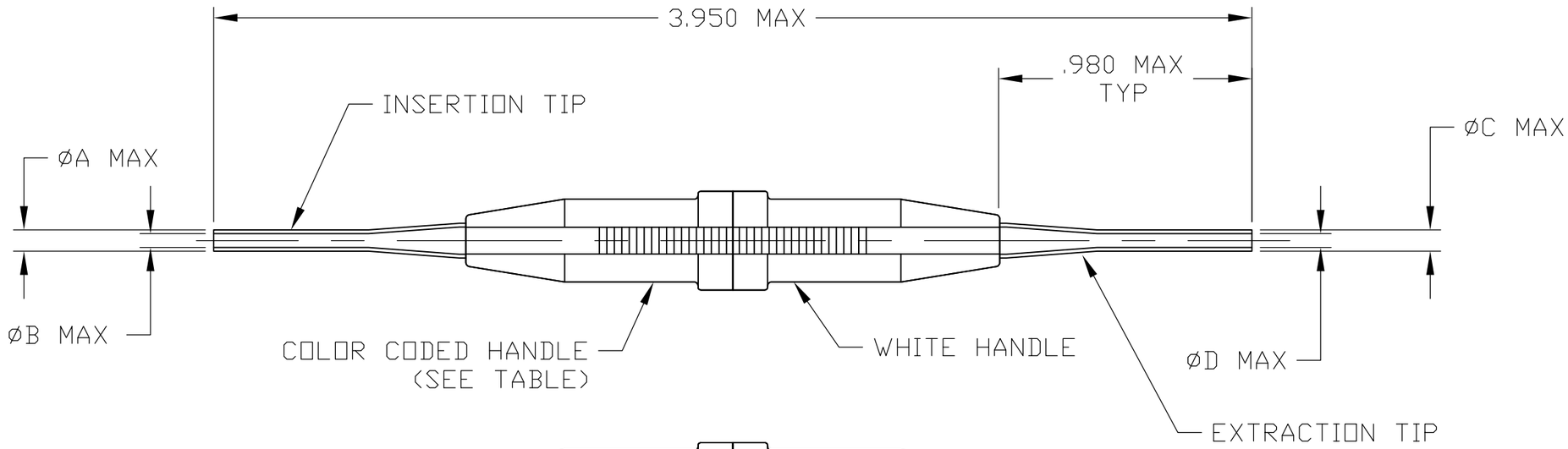

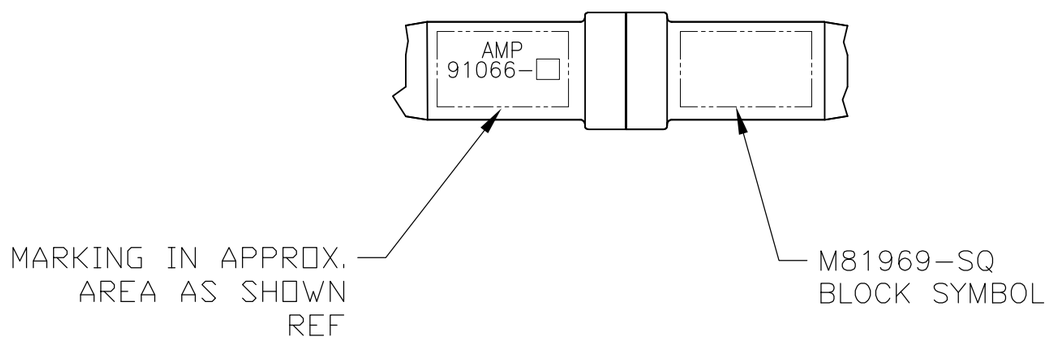

1. FOR CORRECT TOOL USAGE SEE INSTRUCTION SHEET: I.S. 408-7491.

MILITARY PART NO. REF	DIM D	DIM C	DIM B	DIM A	COLOR CODE	SIZE	PART NUMBER
–	.072	.087	.073	.085	RED	20	91066-4
M81969/1-03	.116	.136	.114	.134	BLUE	16	91066-3
M81969/1-01	.055	.074	.056	.065	LT. GREEN	22	91066-1

THIS DRAWING IS A CONTROLLED DOCUMENT.

DIMENSIONS: INCHES

TOLERANCES UNLESS OTHERWISE SPECIFIED:
0 PLC ± –
1 PLC ± –
2 PLC ± –
3 PLC ± –
4 PLC ± –
ANGLES ± –

MATERIAL: PLASTIC & STEEL

FINISH: NICKEL PLATED

DWN C.C.THOMAS 4-30-03
CHK S.GLATFELTER 4-30-03
APVD S.GLATFELTER 4-30-03
PRODUCT SPEC —
APPLICATION SPEC —
WEIGHT —

TE Connectivity

NAME
–
INSERTION/EXTRACTION TOOL
–

SIZE	CAGE CODE	DRAWING NO	RESTRICTED TO
A3	00779	C-91066	—

CUSTOMER DRAWING

SCALE 2:1 SHEET 1 OF 1 REV D1

1470-19 (3/11)