used for: D-SUB HD

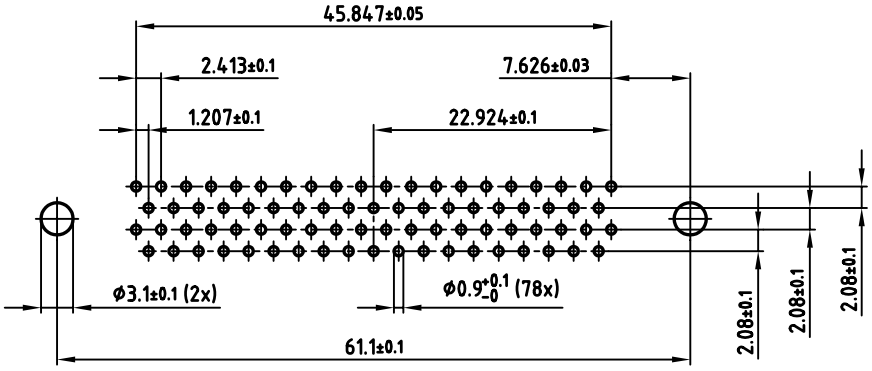


P.C.B. HOLE DRILLINGS

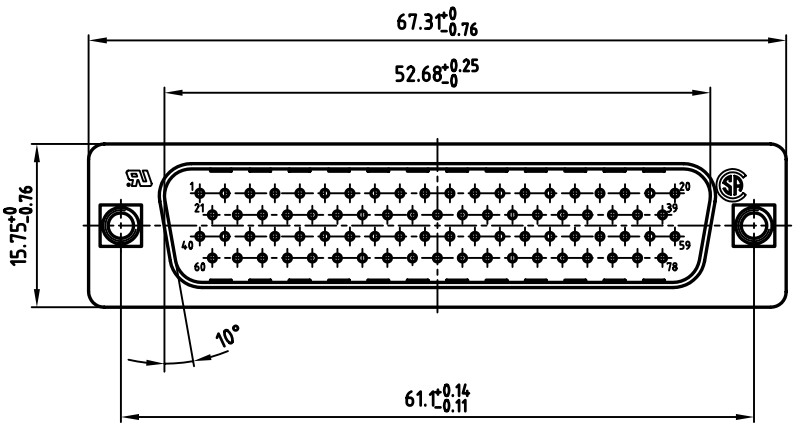


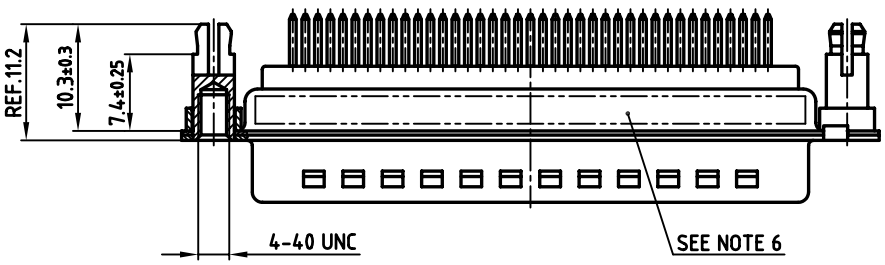


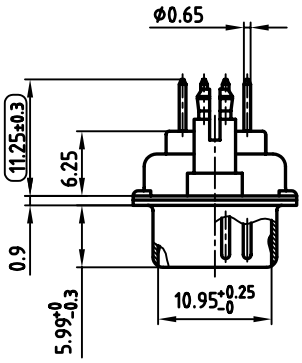


## NOTES:

1. METALSHELLS: STEEL; min. 320µ" TIN
2. INSULATORS: PBT GF UL 94 V-0, BLACK
3. CONTACTS: COPPER ALLOY
   PLATING: min. 8µ" HARD GOLD OVER min. 50µ" NICKEL
4. THREADED SPACER CLIP: COPPER ALLOY; min. 200µ" TIN over 80µ" NICKEL
   PCB-HOLE: Ø3.1±0.1; PCB THICKNESS 1.6mm
5. MAXIMUM TORQUE VALUE FOR THREAD: 6" LBS
6. CONNECTOR IS PART MARKED: 163A16989X CONEC ABC
7. ( ) = CHECK DIMENSION

Directive 2002/95/EC „RoHS" Compliant

APPROVAL # FREIGABE # DEBLOCAGE # AUTORIZACION # APPROVAL

CUSTOMER APPROVAL DATE:

NAME: TITLE:

COMPANY NAME:

THIS DRAWING MAY NOT BE COPIED OR REPRODUCED IN ANY WAY, AND MAY NOT BE PASSED ON TO A THIRD PARTY WITHOUT WRITTEN PERMISSION. OWNERSHIP AND COPYRIGHT OF CONEC GmbH

DO NOT ALTER CAD DRAWING BY HAND

| rev. | description | date | name |
|---|---|---|---|

tolerance

dim. in mm

| | date | name |
|---|---|---|
| 2004 | | |
| drawn | 07.05. | Schmidt |
| appd. | 07.05. | Mickenbecker |
| norm | DIN 41652 | |
| d-old | | |

CONEC®

scale: 2:1

material: SEE NOTES

title:

**D-SUB HD MALE**

78pos. Solder pin straight with threaded spacer clip

dwg no: 16K1A1153

AutoCAD 2004 | DIN-A 3 | sh: 1/1

part no: 163A16989X