THIS DRAWING IS UNPUBLISHED. RELEASED FOR PUBLICATION 21-FEB-1996
© COPYRIGHT 1996 BY TYCO ELECTRONICS CORPORATION. ALL RIGHTS RESERVED.

LOC	DIST
E	B

REVISIONS

P	LTR	DESCRIPTION	DATE	DWN	APVD
	G	ECR-07-015707	13/06/07	MJG	JA
	H	ECR-10-010252	24/05/10	MJG	JA

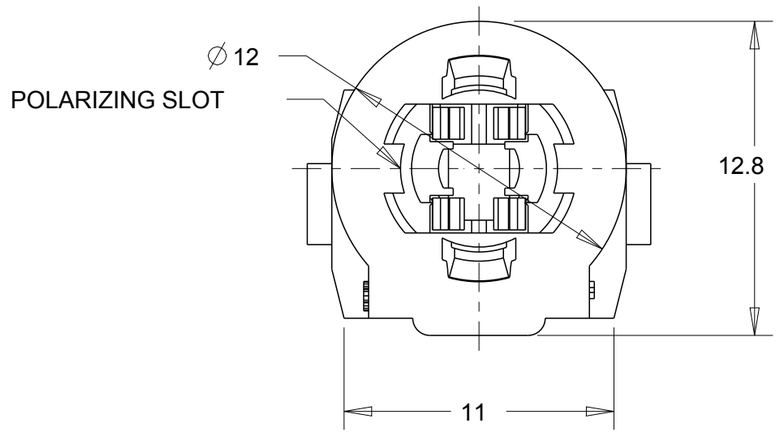

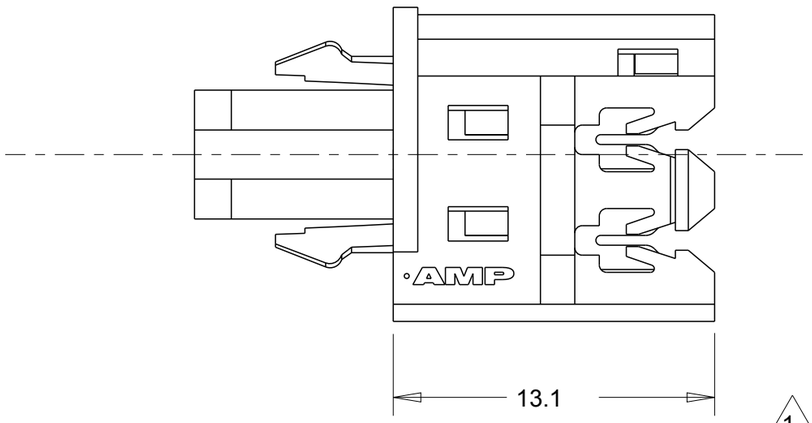

DIODE MARKER BAND THIS END

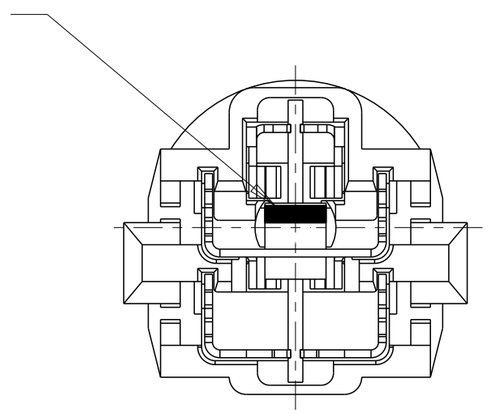

1 MATERIALS

HOUSING :- NYLON 66
CONTACTS :- BRASS

2 AMP PRODUCT SPEC No 108-3382.

3 AMP APPLICATION SPEC No 114-3185.

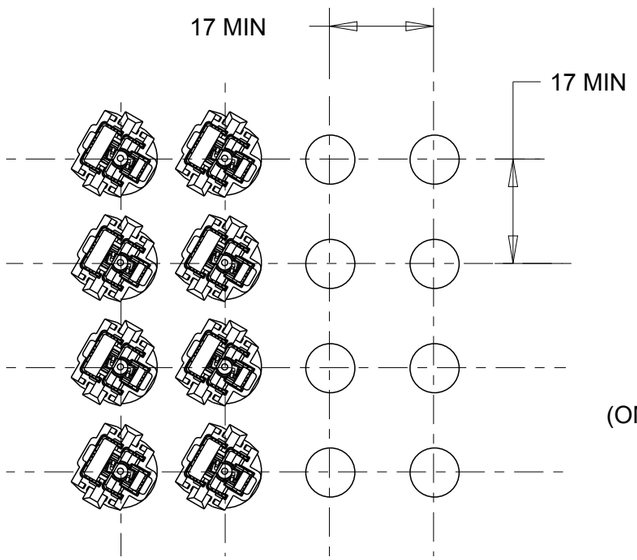

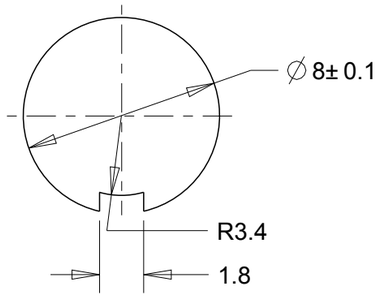

RECOMMENDED PANEL CUTOUT DIMS.
(CUTOUT TAB MAY BE)
(OMITTED IF POLARIZING)
(IS NOT REQUIRED)

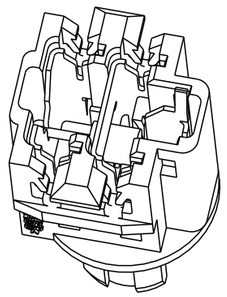

SCALE 5:2

RECOMMENDED MAXIMUM PANEL DENSITY
FOR MANUAL WIRE INSERTION TOOLS.
CONSULT AMP FOR PITCHING DIMENSIONS
IF USING POWERED TOOLS.
SCALE 1:1

PANEL THICKNESS 1.5 TO 2.0

BULBHOLDER WITHOUT BULB	349494-2
DESCRIPTION	PART NUMBER

THIS DRAWING IS A CONTROLLED DOCUMENT FOR TYCO ELECTRONICS CORPORATION
IT IS SUBJECT TO CHANGE AND THE CONTROLLING ENGINEERING ORGANIZATION
SHOULD BE CONTACTED FOR THE LATEST REVISION.

DIMENSIONS: mm

TOLERANCES UNLESS OTHERWISE SPECIFIED:
LINEAR ± 0.5
~~0 PLC ± 0.1~~
~~1 PLC ± 0.1~~
~~2 PLC ± 0.05~~
~~3 PLC ± -~~
~~4 PLC ± -~~
ANGLES ± 0.5

MATERIAL - 1

FINISH -

DWN	A.J.BEKEN	20FEB2002
CHK	R.GOODALL	20FEB2002
APVD	R.GOODALL	20FEB2002
PRODUCT SPEC	108-3382	
APPLICATION SPEC	114-3185	
WEIGHT	-	

Tyco Electronics
Tyco Electronics UK Ltd,
Stanmore, Middlesex, HA7 4RS.

NAME
5mm IDC BULBHOLDER ASSEMBLY
-
WITH DIODE

SIZE	CAGE CODE	DRAWING NO	RESTRICTED TO
A3	00779	C-349494	-

CUSTOMER DRAWING | SCALE 5:1 | SHEET 1 OF 1 | REV H