DRAWING No.: UMCP-8030005	IF IN DOUBT – ASK	©	NOT TO SCALE	THIRD ANGLE PROJECTION	ALL DIMENSIONS IN mm

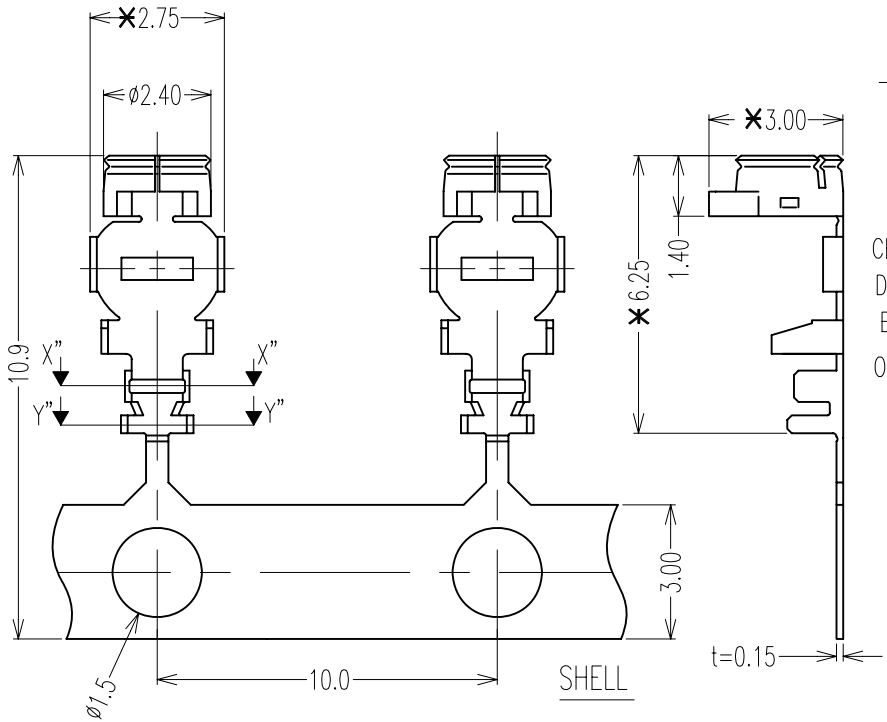

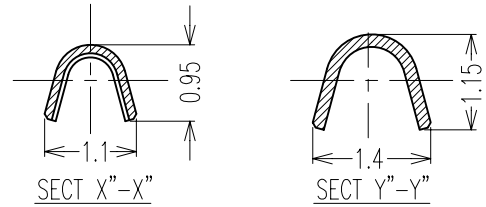

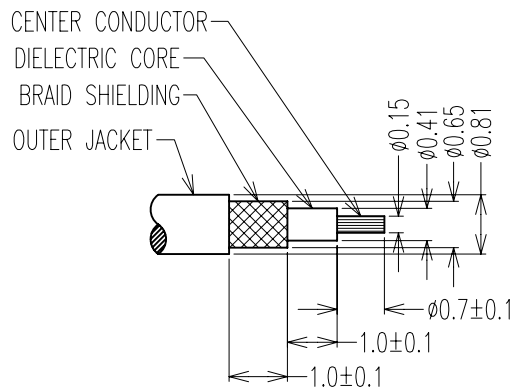

SPECIFICATIONS:
- MATERIAL:–
  - INSULATOR: PBT + 15% G.F
  - CONNECTOR SHELL: PHOSPHOR BRONZE
  - CENTER CONTACT: PHOSPHOR BRONZE
- FINISH:–
  - CONNECTOR SHELL: SILVER PLATING
  - CENTER CONTACT: GOLD PLATING
- ELECTRICAL:–
  - VOLTAGE PROOF: 200 V AC FOR 1 MINUTE
  - CONTACT RESISTANCE: 20 mΩ MAX. FOR CENTER CONTACT
    10 mΩ MAX. FOR OUTSIDE CONTACT
  - INSULATION RESISTANCE: 500 MΩ MIN.
    MEASURED AT 100 V DC
- MECHANICAL:–
  - WITHDRAWAL FORCE: 0.15N MIN.
- ENVIRONMENTAL:–
  - TEMPERATURE RANGE: –40°C TO +90°C

NOTES: ALL DIMENSIONS AND NOTES MARKED ✱ ARE CRITICAL AND MUST BE CHECKED IN ACCORDANCE WITH QUALITY DOC. Q1–02A

NOTES:
REMOVE ALL BURRS & SHARP EDGES 0.25 MAX
MACHINE FILLET R0.25 MAX.
ALL DIAS. TO BE CONCENTRIC WITHIN .125 T.I.R
INTERPRETATION PER MIL STD 8 10 & 12

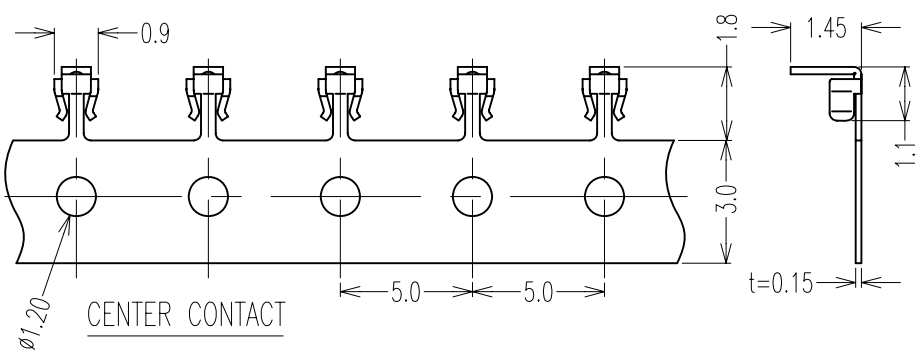

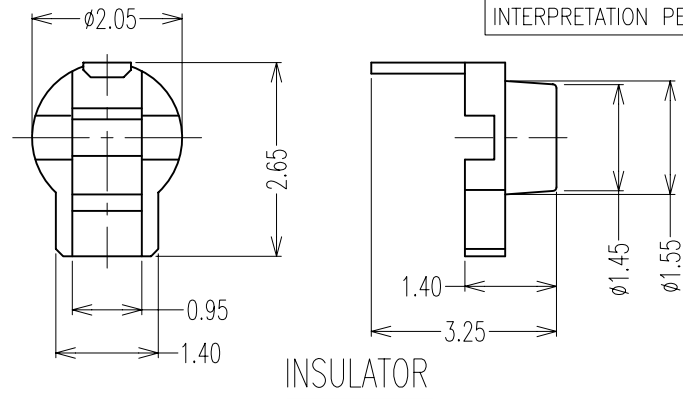

NAME	ISS.	DATE	C/NOTE
Allan	1	01.08.06	–

APPROVED:
CHECKED:
DRAWN: Allan
CUSTOMER REF.:
ASSEMBLY DRG:

HARWIN

HARWIN USA
TEL: 603 893 5376
FAX: 603 893 5396
mis@harwin.com

HARWIN Europe (UK)
TEL: 023 9231 4545
FAX: 023 9231 4590
mis@harwin.co.uk

HARWIN Asia
TEL: +65 6 779 4909
FAX: +65 6 779 3868
mis@harwin.com.sg

THIS DRAWING AND ANY INFORMATION OR DESCRIPTIVE MATTER SET OUT HEREON ARE CONFIDENTIAL AND COPYRIGHT PROPERTY OF THE HARWIN GROUP AND MUST NOT BE DISCLOSED, LOANED, COPIED OR USED FOR MANUFACTURING, TENDERING OR FOR ANY OTHER PURPOSE WITHOUT THEIR WRITTEN PERMISSION.

TOLERANCES
X. = ±1mm
X.X = ±0.25mm
X.XX = ±0.10mm
X.XXX = ±0.01mm
ANGLES = ±5°
UNLESS STATED

MATERIAL: SEE NOTES
FINISH: SEE NOTES
S/AREA: mm²

TITLE: RF CONNECTOR CABLE PLUG (SHELL, INSULATOR, CENTER CONTACT)

DRAWING NUMBER: UMCP-8030005

SHT 1 OF 1

Mouser Electronics

Authorized Distributor

Click to View Pricing, Inventory, Delivery & Lifecycle Information:

Harwin:

UMCP-8030005