DATE	DESCRIPTION	REV.
10.08.13	CHANGE AS PER ECN 13-091	A

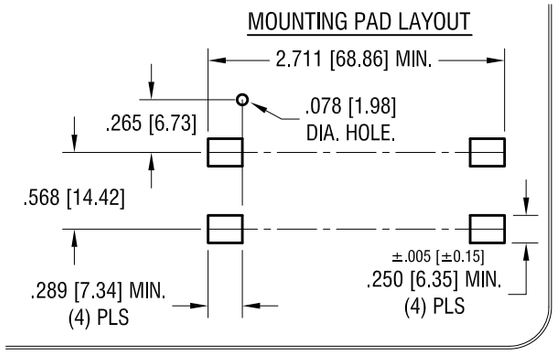

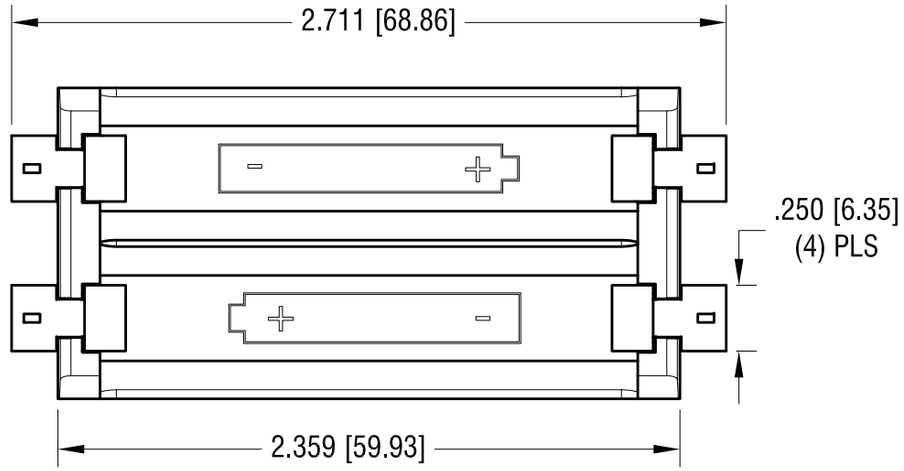

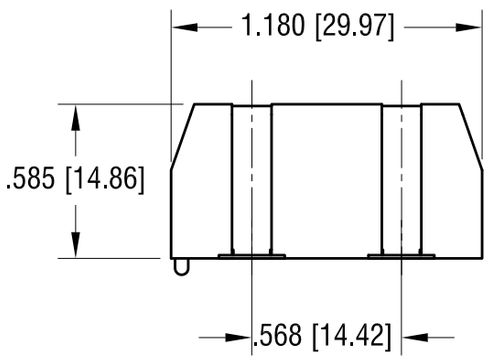

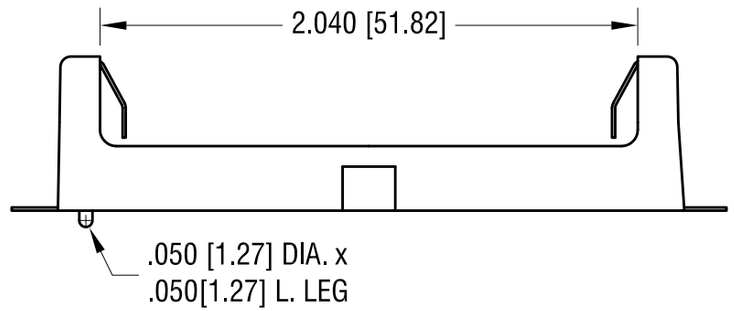

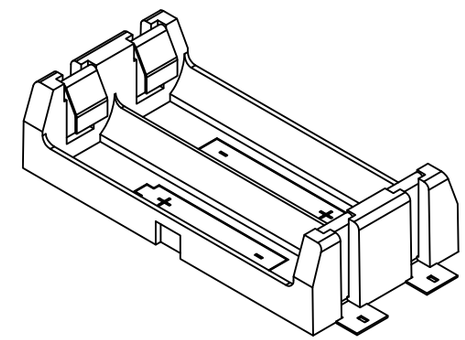

NOTE:
1. BASE:
   MAT'L: HEAT RESISTANCE NYLON
   (UL 94V-0)
2. CONTACT:
   MAT'L: .012 [0.30] THK STAINLESS STEEL
   FINISH: GOLD FLASH, OVER NICKEL PLATE.

THIS DOCUMENT IS THE PROPERTY OF KEYSTONE ELECTRONICS CORP. AND SHALL NOT BE REPRODUCED, DISTRIBUTED OR USED AS A BASIS FOR MANUFACTURE WITHOUT PRIOR WRITTEN PERMISSION FROM KEYSTONE ELECTRONICS CORP.

KEYSTONE ELECTRONICS CORP.
www.keyelco.com • ASTORIA, N.Y. 11105-2017 • Tel (718) 956-8900

PART NAME: SM BATTERY HOLDER, (2) AA			
MATERIAL: AS NOTED			
FINISH: AS NOTED	DRN BY: NT	DATE: 5.18.10	
	APP'D: LN	SCALE: 1.5X	
TOLERANCES INCH [MM] DECIMAL ± .010 [± 0.25] ANGULAR ± 1° UNLESS OTHERWISE SPECIFIED	CODE: C	DWG NO. 1012	