Rev	AWO #	Description	Date	Appr
-		RELEASED	9/11/09	

APPROVED: _____

DATE: _____ TITLE: _____

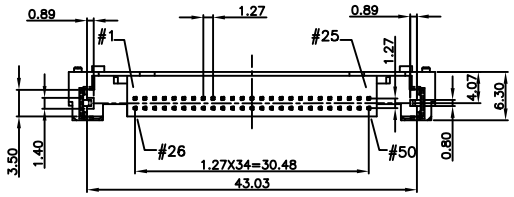

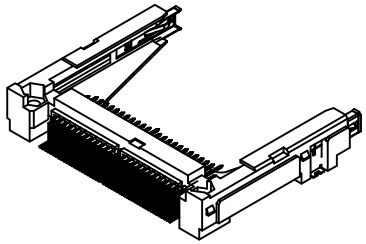

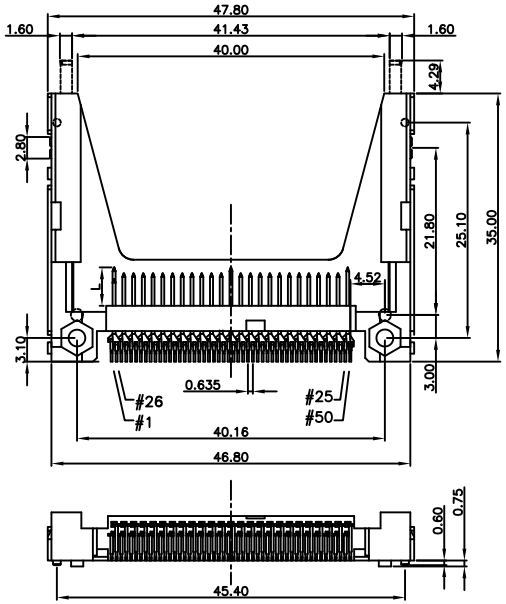

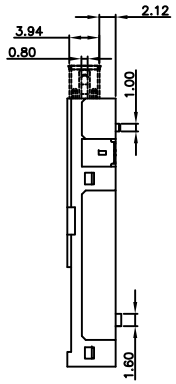

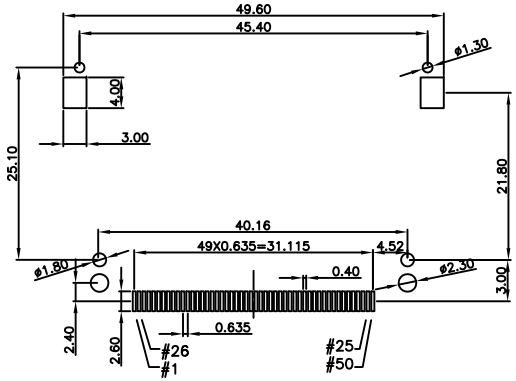

RECOMMENDED P.C.B LAYOUT
TOLERANCES: ±0.05mm

POWER	5.00mm	1,13,38,50
GENERAL	4.25mm	all other pins
DETECT	3.50mm	25,26
Pin type	Interface Dim. L	Pin No.

SPECIFICATIONS:

Material:

Insulator: Thermal Plastic, rated UL 94V–0
Contacts: Copper Alloy
Shell: Copper Alloy

Plating:

Gold flash over Nickel underplate on contact area,
Tin over copper underplate on tails.

Electrical:

Operating Voltage: 100 VACmax
Current rating: 0.5 Amp max
Contact resistance: 40 mohms max
Insulation resistance: 1,000 Mohms min
Dielectric withstanding voltage: 500 VAC for 1 minute

Temperature Rating:

Operating temperature: –20˚C to +90˚C

Environmental:

Lead free, RoHS compliant
Recommended soldering temp: 260˚C for 5 seconds

RoHS COMPLIANT

UNLESS OTHERWISE SPECIFIED
ALL DIMENSIONS ARE MM
TOLERANCES: EXCEPT AS NOTED

INCHES		HOLES	
.X	± .10	Ø.X	±.10
.XX	± .020	Ø.XX	±.015
.XXX	± .015	Ø.XXX	±.010

APPROVALS		DATE
DRAWN	DY	9/11/09
CHECKED		
APPROVED		

ADAM TECH
909 Rahway Avenue, Union, NJ 07083
Phone: 908-687-5000 Fax: 908-687-5710

TITLE: CF TYPE I / II SOCKET
REVERSE MOUNT, W/ GROUNGING

SIZE	PART NO.	REV.
X	CF2A-50-SG-R	-

REF: S00013T | SCALE: NTS | SHEET 1 OF 1