Section 18

TeSys® IEC Contactors and Starters

TeSys D Contactors (p. 18-4)

TeSys F Contactors (p. 18-5)

GV7 Manual Motor Starters and Protectors (p. 18-35)

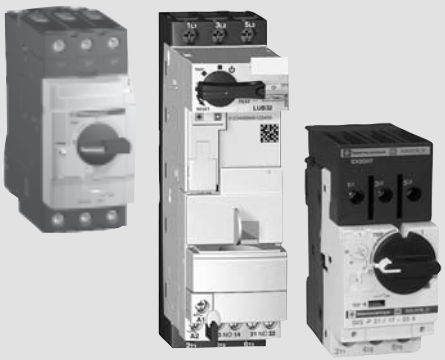

GV3P (p.18-33)

LUB•2 (p. 18-28)

GV2P21 (p.18-33)

Contactors

TeSys D	18-4
TeSys D Reversing	18-6
TeSys F	18-5
TeSys K	18-24
TeSys D and F Accessories	18-8
TeSys K Accessories	18-27

Motor Starters and Protectors

TeSys U	18-28
GV2, GV3, GV7 Manual Motor Protectors	18-33
Enclosed D-Line	18-21
GV Accessories	18-34
LS1D Fuse Block	18-36

Overload Relays

TeSys D	18-4
TeSys F	18-5
TeSys D and F Accessories	18-16
TeSys K	18-24
TeSys K Accessories	18-27
TeSys T	16-92

Soft Start Module ATS01 18-32

Replacement Parts

TeSys D Coils	18-17
TeSys F Coils	18-20
TeSys F Contact Tips, etc.	18-13

Wiring Systems

GV-Line Bus Bars	18-37
TeSys D Quickfit	18-38
AK5	18-39

Dimensions 18-40

For more information on lighting, definite purpose (DP), and elevator ratings for TeSys D and TeSys F contactors, please refer to catalog 8502CT9901.

For more information on machine safety applications using TeSys D and TeSys F, please refer to catalog MKTED208051EN-US.

See our website, www.schneider-electric.us, for UL 508A short circuit ratings (SCCR).

© 2009 Schneider Electric
All Rights Reserved

LC	____	**D**	____	____	____	____
Full Voltage, Non-Reversing	1				
Full Voltage, Reversing	2				
TeSys D 3 Pole Contactors 9A to 150A					
Contactor AC-3 Full Load Amps (FLA)					
9A FLA		09			
12A FLA		12			
18A FLA		18			
25A FLA		25			
32A FLA		32			
38A FLA (not marketed in US)		38			
40A FLA		40			
50A FLA		50			
65A FLA		65			
80A FLA		80			
95A FLA (not marketed in US)		95			
115A FLA		115			
150A FLA		150			
Everlink Power Connection (40A to 65A only)			A		
No Everlink Power Connection (9A to 32A, 80A to 150A)			Blank		
Termination Options (choose one)					
Screw Termination					Blank
Spring Terminations †					3
Ring Tongue Terminations ●					6
Slip-on Terminations (9A to 12A only)					9

Coil Voltage (choose one)

AC Coils (50/60 Hz)		DC Coils (standard)		DC Coils low consumption available for 9 to 38 amp only	
12V	J7	12V	JD	5V	AL
21V	Z7	21V	ZD	12V	JL
24V	B7	24V	BD	21V	ZL
36V	C7	36V	CD	24V	BL
42V	D7	48V	ED	48V	EL
48V	E7	60V	ND	72V	SL
60V	EE7	72V	SD	96V	DL
100V	K7	110V	FD	110V	FL
110V	F7	125V	GD	220V	ML
115V	FE7	220V	MD	250V	UL
120V	G7	250V	UD		
127V	FC7	440V	RD		
200V	L7				
208V	LE7				
220V	M7				
230V	P7				
240V	U7				
277V	W7				
380V	Q7				
400V	V7				
415V	N7				
440V	R7				
480V	T7				
500V	S7				
575V	SC7				
600V	X7				
660V	Y5 (50 Hz only)				

† On LC1D09 - LC1D65A, for spring terminals versions add '3' to the catalog number prior to adding the voltage code (ex. LC1D12G7 becomes LC1D123G7 and LC1D40AG7 becomes LC1D40A3G7 - Note that 40A to 65A spring terminals are only on the control terminations and not on power terminations). No price adder for this modification.

● On LC1D09 - LC1D65A and LC1DT20 through LC1DT80A, for ring tongue versions add '6' to the catalog number prior to adding the voltage code (ex. LC1D09G7 becomes LC1D096G7 and LC1D50AG7 becomes LC1D50A6G7). No price adder for this modification.

Note: To be used for interpretation of current catalog numbers only.

© 2009 Schneider Electric
All Rights Reserved

LC	____	**F**	____	____	____ ____
Full Voltage, Non-Reversing	1				
Full Voltage, Reversing	2				
TeSys F 2, 3, and 4 Pole Contactors 115A to 800A					
Contactor AC-3 Full Load Amps (FLA)					
115A FLA			115		
150A FLA			150		
185A FLA			185		
225A FLA			225		
265A FLA			265		
330A FLA			330		
400A FLA			400		
500A FLA			500		
630A FLA			630		
780A FLA			780		
800A FLA			800		
Number of Poles					
2 Poles (400A, 500A, and 630A only)				2	
3 Poles (all sizes)				Blank	
4 Poles (all sizes except 800A)				4	
Termination Options - Purchase Lugs Separately					Blank

Coil Voltage (choose one and note contactor size it can be used on)

AC Coils		**For use on:**
24V (50 Hz)	B5	LC1F115 - F225
24V (60 Hz)	B6	LC1F115 - F225
24V (40-400 Hz)	B7	LC1F225 - F400
42V (50 Hz)	D5	LC1F115 - F225
48V (50 Hz)	E5	LC1F115 - F225
48V (60 Hz)	E6	LC1F115 - F225
48V (40-400 Hz)	E7	LC1F115 - F630
110V (50 Hz)	F5	LC1F115 - F225
110V (60 Hz)	F6	LC1F115 - F225
110V (40-400 Hz)	B7	LC1F115 - F780
115V (50 Hz)	FE5	LC1F115 - F225
115V (40-400 Hz)	FE7	LC1F115 - F780
120V (60 Hz)	G6	LC1F115 - F225
120V (40-400 Hz)	G7	LC1F115 - F400
120V (40-400 Hz)	F7	LC1F500 - F780
127V (60 Hz)	G6	LC1F115 - F225
127V (40-400 Hz)	G7	LC1F115 - F780
200/208V (60 Hz)	L6	LC1F115 - F225
200/208V (40-400 Hz)	L7	LC1F265 - F780
208V (40-400 Hz)	L7	LC1F115 - F225
220V (50 Hz)	M5	LC1F115 - F225
220V (60 Hz)	M6	LC1F115 - F225
220V (40-400 Hz)	M7	LC1F115 - F780
230V (50 Hz)	P5	LC1F115 - F225
230V (40-400 Hz)	P7	LC1F115 - F800
240V (50 Hz)	U5	LC1F115 - F225
240V (60 Hz)	U6	LC1F115 - F225
240V (40-400 Hz)	U7	LC1F115 - F780
277V (50 Hz)	W5	LC1F115 - F225
277V (40-400 Hz)	W7	LC1F115 - F780
380V (50 Hz)	Q5	LC1F115 - F225
380V (60 Hz)	Q6	LC1F115 - F225
380V (40-400 Hz)	Q7	LC1F115 - F780
400V (50 Hz)	V5	LC1F115 - F225
400V (40-400 Hz)	V7	LC1F115 - F800
415V (50 Hz)	N5	LC1F115 - F225
415V (40-400 Hz)	N7	LC1F115 - F780
440V (50 Hz)	R5	LC1F115 - F225
440V (40-400 Hz)	R7	LC1F115 - F780
460/480V (60 Hz)	Q6	LC1F115 - F225
480V (40-400 Hz)	N7	LC1F780
500V (50 Hz)	S5	LC1F115 - F225
500V (40-400 Hz)	S7	LC1F115 - F780
600V (40-400 Hz)	X7	LC1F500 - F630
660V (60 Hz)	Y6	LC1F115 - F225

DC Coils		**For use on:**
24V	BD	LC1F115 - F400
48V	ED	LC1F115 - F630
110V	FD	LC1F115 - F780
110V	FW	LC1F800
125V	GD	LC1F115 - F780
220V	MD	LC1F265 - F780
220/240V	MW	LC1F800
250V	UD	LC1F115 - F780
380/400V	QW	LC1F800
440V	RD	LC1F115 - F780

© 2009 Schneider Electric
All Rights Reserved

LC1D09

LC1D093

LC1D40A

LC1D115

LRD22

LRD3

E164862
CCN NLDX

LR43364
Class 3211 04

Table 18.1: 3- or 4-Pole Screw Terminal Connections

Maximum Horsepower Ratings						Maximum Current Utilization Categories		No of Poles		Instantaneous Auxiliary Contacts		Catalog Number ▲	$ Price	
Single Phase		Three Phase				Inductive AC3 Amperes	Resistive AC1 Amperes	N.O.	N.C.	N.O.	N.C.		AC Coils	DC Coils
115 V hp	230 V hp	200 V hp	230 V hp	460 V hp	575 V hp									
0.5	1	2	2	5	7.5	9	20	3	0	1	1	LC1D09 ♦★▼	**94.00**	**119.00**
—	—	—	—	—	—	—		4				LC1DT20 ♦	**94.00**	**119.00**
—	—	—	—	—	—	—		2	2			LC1D098 ♦	**94.00**	**119.00**
1	2	3	3	7.5	10	12	25	3	0	1	1	LC1D12 ♦★▼	**119.00**	**149.00**
—	—	—	—	—	—	—		4				LC1DT25 ♦	**119.00**	**149.00**
—	—	—	—	—	—	—		2	2			LC1D128 ♦	**119.00**	**149.00**
1	3	5	5	10	15	18	32	3	0	1	1	LC1D18 ♦★	**136.00**	**160.00**
—	—	—	—	—	—	—		4				LC1DT32 ♦	**149.00**	**183.00**
—	—	—	—	—	—	—		2	2			LC1D188 ♦	**149.00**	**183.00**
2	3	7.5	7.5	15	20	25	40	3	0	1	1	LC1D25 ♦★	**151.00**	**181.00**
—	—	—	—	—	—	—		4				LC1DT40 ♦	**193.00**	**240.00**
—	—	—	—	—	—	—		2	2			LC1D258 ♦	**193.00**	**240.00**
2	5	10	10	20	30	32	50	3	0	1	1	LC1D32 ♦★	**172.00**	**213.00**
3	5	10	10	30	30	40	60	3	0	1	1	LC1D40A	**218.00**	**275.00**
—	—	—	—	—	—	—		4		0	0	LC1DT60A	**296.00**	**353.00**
3	7.5	15	15	40	40	50	80	3	0	1	1	LC1D50A	**234.00**	**291.00**
5	10	20	20	40	50	65		3				LC1D65A	**322.00**	**379.00**
—	—	—	—	—	—	—		4	0	0	0	LC1DT80A	**446.00**	**503.00**
7.5	15	25	30	60	60	80	125	3	0	1	1	LC1D80	**363.00**	**420.00**
—	—	—	—	—	—	—		4		0	0	LC1D80004 ■	**489.00**	**524.00**
—	—	—	—	—	—	—		2	2			LC1D80008 ■	**489.00**	**524.00**
—	—	30	40	75	100	115	200	3	0	1	1	LC1D115	**479.00**	**479.00**
—	—	40	50	100	125	150		3				LC1D150	**696.00**	**696.00**
—	—	—	—	—	—	—		4		0	0	LC1D115004	**630.00**	**630.00**

▲ Complete catalog number with coil voltage code from table on page 18-6; example, LC1D09G7.
■ For DC version of these devices replace the 'C' with 'P' (ex. LC1D80004** becomes LP1D80004**). This applies only to 80A 4 pole devices.
♦ On LC1D09 - LC1D65A and LC1DT20 through LC1DT80A, for ring tongue versions add '6' to the catalog number prior to adding the voltage code (ex. LC1D09G7 becomes LC1D096G7 and LC1D50AG7 becomes LC1D50A6G7). No price adder for this modification.
★ On LC1D09 - LC1D65A, for spring terminals versions add '3' to the catalog number prior to adding the voltage code (ex. LC1D12G7 becomes LC1D123G7 and LC1D40AG7 becomes LC1D40A3G7 - Note that 40A to 65A spring terminals are only on the control terminations and not on power terminations). No price adder for this modification.
▼ On LC1D09 and LC1D12 only, for slip-on connector versions add "9" to the catalog number prior to adding the voltage code (ex. LC1D09G7 becomes LC1D099G7). No price adder for this modification.

Table 18.2: TeSys D Overload Relays — Ambient Compensated, Bi-Metallic Direct Mount

Current Setting Range Amperes	For Direct Mounting to LC1...	Class 10 with Single Phase Sensitivity	Class 10 without Single Phase Sensitivity	Class 20 with Single Phase Sensitivity	Class 20 without Single Phase Sensitivity	$ Price
0.10–0.16	D09–D32	LRD01	LR3D01	—	—	**60.00**
0.16–0.25		LRD02	LR3D02	—	—	
0.25–0.40		LRD03	LR3D03	—	—	
0.40–0.63		LRD04	LR3D04	—	—	
0.63–1		LRD05	LR3D05	—	—	
1–1.6		LRD06	LR3D06	—	—	
1.6–2.5		LRD07	LR3D07	—	—	
2.5–4		LRD08	LR3D08	LRD1508	LR3D1508A1	
4–6		LRD10	LR3D10	LRD1510	LR3D1510A1	
5.5–8	D09–D32	LRD12	LR3D12	LRD1512	LR3D1512A1	**62.00**
7–10	D09–D32	LRD14	LR3D14	LRD1514	LR3D1514A1	
9–13	D12–D32	LRD16	LR3D16	LRD1516	LR3D1516A1	
12–18	D18–D32	LRD21	LR3D21	LRD1521	LR3D1521A1	
16–24	D25–D32	LRD22	LR3D22	—	—	
17–25	D25–D32	—	—	LRD1522	LR3D1522A1	
23–32	D25–D32	LRD32	LR3D32	—	—	**73.00**
23–28	D25–D32	—	—	LRD1530	LR3D1530A1	
25–32	D25–D32	—	—	LRD1532	LR3D1532A1	
30–38	D32	LRD35	LR3D35	—	—	
9-13	D40A-D65A △	LRD313	LR3D313	LRD313L	—	**107.00**
12-18	D40A-D65A △	LRD318	LR3D318	LRD318L	—	
16-25	D40A-D65A △	LRD325	LR3D325	LRD325L	—	
23-32	D40A-D65A △	LRD332	LR3D332	LRD332L	—	
30-40	D40A-D65A △	LRD340	LR3D340	LRD340L	—	
37-50	D40A-D65A △	LRD350	LR3D350	LRD350L	—	
48-65	D40A-D65A △	LRD365	LR3D365	LRD365L	—	
17-25	D40-D80 □	LRD3322	LR3D3322	LR2D3522	LR3D3522	**107.00**
23-32	D40-D80 □	LRD3353	LR3D3353	LR2D3553	LR3D3553	
30-40	D40-D80 □	LRD3355	LR3D3355	LR2D3555	LR3D3555	
37-50	D50-D80 □	LRD3357	LR3D3357	LR2D3557	LR3D3557	
48-65	D50-D80 □	LRD3359	LR3D3359	LR2D3559	LR3D3559	
55–70	D65–D80	LRD3361	LR3D3361	LR2D3561	LR3D3561	**127.00**
63–80	D65–D80	LRD3363	LR3D3363	LR2D3563	LR3D3563	
80–104	D80	LRD3365	—	—	—	
80–104	D115–D150	LRD4365	—	—	—	**362.00**
95–120	D115–D150	LRD4367	—	—	—	
110–140	D150	LRD4369	—	—	—	

△ Overload relays with Everlink termination - direct mount to D40A to D65A only.
□ Direct mount to old D2 style D40 to D65 (no Everlink terminations) and to D80 only.

TeSys D contactor accessories . . . . . pages 18-8 to 18-11
TeSys D overload relay accessories . . . . . page 18-16
TeSys D replacement coils. . . . . pages 18-17 to 18-19
Dimensions. . . . . pages 18-40 to 18-46
TeSys T. . . . . pages 16-91

© 2009 Schneider Electric
All Rights Reserved

Table 18.3: TeSys D Overload Relays — Solid State

Current Setting Range Amperes	For Direct Mounting Beneath Contractor LC1	Class 10	Class 20	$ Price
60–100	D115–D150	LR9D5367	LR9D5567	**298.00**
90–150	D115–D150	LR9D5369	LR9D5569	**298.00**

Table 18.4: TeSys F 2-, 3-, and 4-Pole Contactors

LC1F115

Standard power ratings of 3-phase motors 50/60 Hz in category AC-3				Maximum Current		Number of Poles	Catalog Number ▲	$ Price
200 V 208 V	220 V 240 V	460 V 480 V	575 V 600 V	AC-3	AC-1		Panel Mount with Screws	
HP	HP	HP	HP	A	A			
30	40	75	100	115	200	3	LC1F115	**479.00**
						4	LC1F1154	**630.00**
40	50	100	125	150	250	3	LC1F150	**696.00**
						4	LC1F1504	**825.00**
50	60	125	150	185	275	3	LC1F185	**938.00**
						4	LC1F1854	**1439.00**
Current Rated				225	315	3	LC1F225	**1059.00**
						4	LC1F2254	**1935.00**
60	75	150	175	265	350	3	LC1F265	**1179.00**
						4	LC1F2654	**1646.00**
75	100	200	250	330	400	3	LC1F330	**1621.00**
						4	LC1F3304	**1846.00**
100	125	250	300	400	500	2	LC1F4002	**1521.00**
						3	LC1F400	**1874.00**
						4	LC1F4004	**2133.00**
150	200	400	500	500	700	2	LC1F5002	**4324.00**
						3	LC1F500	**4970.00**
						4	LC1F5004	**5617.00**
250	300	600	800	630	1000	2	LC1F6302	**5917.00**
						3	LC1F630	**6474.00**
						4	LC1F6304	**7582.00**
Current Rated				780	1600	3	LC1F780	**7788.00**
						4	LC1F7804	**9940.00**
—	450	800	900	800	1000	3	LC1F800	**6676.00**

▲ Complete part number by adding coil voltage code from table below. For example: LC1F115G7. All contactors (except F780) include 1 N.O. coil interlock contact.

Table 18.5: TeSys F 3-Phase Overload Relays — Solid State Separate Mount ■

Current Setting Range Amps	For Direct Mounting to Contactor LC1●●●●	Class 10 Trip ♦ Catalog Number	Class 20 ♦ Catalog Number	$ Price
30–50	F115–F185	LR9F5357	LR9F5557	**298.00**
48–80	F115–F185	LR9F5363	LR9F5563	**298.00**
60–100	F115–F185	LR9F5367	LR9F5567	**298.00**
90–150	F115–F185	LR9F5369	LR9F5569	**298.00**
132–220	F185 ★ –F265	LR9F5371	LR9F5571	**298.00**
200–330	F265–F500	LR9F7375■	LR9F7575■	**333.00**
300–500	F265–F500	LR9F7379■	LR9F7579■	**737.00**
380–630	F400–F630	LR9F7381■	LR9F7581■	**905.00**

■ When mounting overload relays LR9F5●57 to LR9F5●71 directly beneath the contactor, supporting the relays with a mounting plate is recommended. With overload relays LR9F7●75 to LR9F7●81, use of a support mounting plate is mandatory.
♦ IEC standard 60947-4 specifies the following trip times when the overload relay senses 7.2 times the setting current:
Class 10 — between 4 and 10 seconds
Class 20 — between 6 and 20 seconds
★ Interconnection kit LA7F407 is required to mount an LR9F●71 to an LC1F185.

Table 18.6: Coil Voltage Codes ◊

Contactor	Hz	24 V	48 V	110 V	120 V	125 V	208 V	220 V	240 V	250 V	440 V	480 V	600 V
AC													
D09–D150	50/60	B7	E7	F7	G7	—	LE7	M7	U7	—	—	T7 ▼	X7 ▼△
LC1D80–LC1D150 only	60	B6	E6	F6	G6	—	L6	M6	U6	—	—	T6	X6 △
	50	B5	E5	F5	—	—	—	M5 ▼	U5	—	—	—	—
F115, F150, and F185	50	B5	E5	F5	—	—	—	M5	U5	—	—	—	—
	60	B6	E6	F6	G6	—	L6	M6	U6	—	—	Q5	SC
F265, and F330	40–400	B7	E7	F7	G7	—	L7	M7	U7	—	—	S7☆	X7
F400— F780	40–400	—	E7	F7	G7	—	L7	M7	U7	—	—	N7	X7 □
DC													
D09-D32, DT20-D258 Low Consumption	—	BL	EL	FL	—	—	—	ML	—	UL	—	—	—
D09–D150	—	BD	ED	FD	—	GD	—	MD	—	UD	RD	—	—
F115-F330	—	BD	ED	FD	—	GD	—	MD	—	UD	RD	—	—
F400–F780	—	—	ED	FD	—	GD	—	MD	—	UD	RD	—	—

▼ Not available for LC1D80 - LC1D150
△ Not available for LC1D115 or LC1D150
□ Not available for LC1F780. The 600 V coils for the LC1F400 - LC1F630 do not include an auxiliary contact for holding circuits.
◊ For additional voltage codes refer to the IEC Contactor and Starter Catalog **8502CT9901**.
☆ For use with F265—F330 only.

E164862
CCN NLDX

LR43364
Class 3211 04

Table 18.7: Coil Voltage Codes for AC and DC Voltages for F800 (includes built-in surge suppressor)

Volts AC/DC	24	48	110	120	127	208	220	240	277	380	415	440	480	575	600	660
50/60 HZ	—	—	FW	FW	FW	—	MW	MW	—	QW	QW	QW	—	—	—	—

TeSys F contactor accessories . . . . . page 18-11
TeSys F overload relay accessories . . . . . page 18-16
TeSys F replacement coils and parts . . . . . pages 18-13, 18-18, 18-20
Dimensions . . . . . pages 18-42 to 18-49

© 2009 Schneider Electric
All Rights Reserved

Each 3-pole device is pre-wired with line and load side power wiring for reversing applications.
Each 4-pole device is pre-wired with load side power wiring

LC2D09

Table 18.8: 3-Pole & 4-Pole Mechanically Interlocked Contactors

Maximum Horsepower Ratings						Maximum Current		No. of N.O. Power Poles	Built In Auxiliary Contacts (per contactor)		Catalog Number ▲■	$ Price	
Single Phase		Three Phase				Inductive AC3 Amperes	Resistive AC1 Amperes					AC Control	DC Control
115 V hp	230 V hp	200 V hp	230 V hp	460 V hp	575 V hp				N.O.	N.C.			
0.5	1	2	2	5	7.5	9	20	3	1	1	LC2D09♦	**234.00**	**317.00**
—	—	—	—	—	—	—		4	1	1	LC2DT20	**234.00**	**317.00**
1	2	3	3	7.5	10	12	25	3	1	1	LC2D12♦	**317.00**	**368.00**
—	—	—	—	—	—	—		4	1	1	LC2DT25	**317.00**	**368.00**
1	3	5	5	10	15	18	35	3	1	1	LC2D18♦	**344.00**	**400.00**
—	—	—	—	—	—	—	32	4	1	1	LC2DT32	**419.00**	**443.00**
2	3	7.5	7.5	15	20	25	40	3	1	1	LC2D25♦	**374.00**	**436.00**
—	—	—	—	—	—	—		4	1	1	LC2DT40	**456.00**	**477.00**
2	5	10	10	20	30	32	50	3	1	1	LC2D32♦	**415.00**	**503.00**
3	5	10	10	30	30	40	60	3	1	1	LC2D40A	**565.00**	**650.00**
3	7.5	15	15	40	40	50	70	3	1	1	LC2D50A	**596.00**	**680.00**
5	10	20	20	50	50	65	80	3	1	1	LC2D65A	**778.00**	**857.00**
7.5	15	30	30	60	60	80	125	3	1	1	★		—
—	—	—	—	—	—	—		4	—	—	★		—
—	—	30	40	75	100	115	200	3	1	1	LC2D115 ▼	**1165.00**	**1165.00**
—	—	—	—	—	—	—		4	—	—	LC2D115004 ▼	**1391.00**	**1391.00**
—	—	40	50	100	125	150	200	3	1	1	LC2D150▼	**1598.00**	**1598.00**

▲ Use voltage codes from the "Voltage Codes" table below to complete the catalog number. For example: LC2D09G7
■ Includes mechanical interlock without electrical contacts. Installer to complete wiring for electronically interlocking contactor operating coils by utilizing a N.C. auxiliary contact integrated in the contactor or optional LADN or LAD8N auxiliary contact block.
♦ For LC2D09–LC2D32, electrical interlock can be included by adding a "V" to the end of the catalog number (ex: LC2DO9B7V). List price adder: $5.00.
★ For these items, order two non-reversing contactors and one mechanical interlock separately. See page 18-4 and 18-14 for selection.
▼ Includes mechanical interlock (Type LA9D11502) with pre-wired electrical contacts for interlocking contactor operating coils.

Table 18.9: Coil Voltage Codes ☆

Contactor	Hz	24 V	48 V	110 V	120 V	125 V	208 V	220 V	240 V	250 V	440 V	480 V	600 V
AC													
D09–D150	50/60	B7	E7	F7	G7	—	LE7	M7	U7	—	—	T7 △	X7 △
LC1D80–LC1D150	50	B5	E5	F5	—	—	—	M5 △	U5	—	—	—	—
	60	B6	E6	F6	G6	—	L6	M6	U6	—	—	T6	X6 □△
F115, F150, F185	50 Hz	B5	E5	F5	—	—	—	M5	U5	—	—	—	—
	60 Hz	B6	E6	F6	G6	—	L6	M6	U6	—	—	Q5	SC
F265, F330	40–400 Hz	B7	E7	F7	G7	—	L7	M7	U7	—	—	S7 ▽	X7
F400–F780	40–400 Hz	—	E7	F7	F7	—	L7	M7	U7	—	—	N7	X7 ◊
DC													
D09-D32, DT20-D258 Low Consumption	—	BL	EL	FL	—	—	—	ML	—	UL	—	—	—
D09–D150	—	BD	ED	FD	—	GD	—	MD	—	UD	RD	—	—
F115–F330	—	BD	ED	FD	—	GD	—	MD	—	UD	RD	—	—
F400–F780	—	—	ED	FD	—	GD	—	MD	—	UD	RD	—	—

△ Not available for LC1D80 - LC1D150.
□ Not available for LC1D115 or LC1D150.
◊ Not available for LC1F780. The 600 V coils for the LC1F400 - LC1F630 do not include an auxiliary contact for holding circuits.
☆ For additional voltage codes refer to the IEC Contactor and Starter Catalog **8502CT9901**.
▽ For use with F265—F330 only.

Table 18.10: Coil Voltage Codes for AC and DC Coil Voltages for F800 (includes built-in surge suppressor)

Volts AC/DC	24	48	110	120	127	208	220	240	277	380	415	440	480	575	600	660
50/60 Hz	—	—	FW	FW	FW	—	MW	MW	—	QW	QW	QW	—	—	—	—

TeSys D contactor accessories . . . . . pages 18-8 to 18-11
TeSys D overload relay accessories . . . . . page 18-16
TeSys D replacement coils. . . . . pages 18-17 to 18-19
Dimensions. . . . . pages 18-40 to 18-46

E164862
CCN NLDX

LR43364
Class 3211 04

© 2009 Schneider Electric
All Rights Reserved

LC1F265

HOW TO ORDER:

Components are available for customer assembly of TeSys F reversing contactors. For example, the following components must be ordered to build a 75 hp @ 460 V reversing contactor with a 120 V/60 Hz coil:

Table 18.11:

Quantity	Catalog Number	Description
2	LC1F115G6	Contactors
6	DZ2FF1	Lugs (page 18-12)
2	LADN11	Auxiliary contacts
1	LA9FF976	Power connections
1	LA9FF970	Mechanical interlock

Table 18.12: 3-Pole Contactors

Maximum Horsepower Ratings				Maximum Current		Holding Circuit Contact Built Into Coil		Catalog Number▲	$ Price
Three Phase				Inductive AC3 Amperes	Resistive AC1 Amperes				
200 V hp	230 V hp	460 V hp	575 V hp			N.O.	N.C.		
30	40	75	100	115	200	1	0	LC1F115	**479.00**
40	50	100	125	150	250	1	0	LC1F150	**696.00**
50	60	125	150	185	275	1	0	LC1F185	**938.00**
60	75	150	200	265	350	1	0	LC1F265	**1179.00**
75	100	200	250	330	400	1	0	LC1F330	**1621.00**
100	125	250	300	400	500	1	0	LC1F400	**1874.00**
150	200	400	500	500	700	1	0	LC1F500	**4970.00**
250	300	600	800	630	1000	1	0	LC1F630	**6872.00**
Current rated				780	1600	0	0	LC1F780	**7788.00**
—	450	800	900	800	1000	0	0	LC1F800	**6676.00**

▲ Use coil voltage codes from the "Voltage Codes" table on page 18-6 to complete the contactor catalog number.

Table 18.13: Auxiliary contact (electrical interlocking) - 2 must be purchased

For use with	Number of Contacts	Maximum Number of Blocks Per Contactor	Contact Arrangement		Catalog Number	$ Price
LC1F to be ordered separately	1	1	1	—	LADN10	**13.10**
			—	1	LADN01	**13.10**
	2	2	1	1	LADN11	**20.70**
			2	-	LADN20	**20.70**
	4	2	2	2	LADN22	**41.50**
			1	3	LADN13	**41.50**
			4	—	LADN40	**41.50**
			—	4	LADN04	**41.50**
			3	1	LADN31	**41.50**
			2	2 ■	LADC22	**41.50**

■ including 1 N.O. + 1 N.C. make-before-break

Table 18.14: Accessories—For the assembly of three-pole reversing contactors (horizontal mounting)

With 2 Identical Contactors ♦	Set Of Power Connections Catalog Number	$ Price	Horizontal Mounting Mechanical Interlock Kit Catalog Number	$ Price
LC1F115	LA9FF976	**106.00**	LA9FF970	**53.00**
LC1F150	LA9F15076	**96.00**	LA9FF970	**53.00**
LC1F185	LA9FG976	**113.00**	LA9FG970	**53.00**
LC1F265	LA9FH976	**151.00**	LA9FJ970	**76.00**
LC1F330	LA9FJ976	**225.00**	LA9FJ970	**76.00**
LC1F400	LA9FJ976	**198.00**	LA9FJ970	**76.00**
LC1F500	LA9FK976	**306.00**	LA9FJ970	**76.00**
LC1F630, F800	LA9FL976	**568.00**	LA9FL970	**76.00**

♦ For two contactors of different size, refer to pages 18-15.

TeSys F contactor accessories. . . . . .page 18-11
TeSys F overload relay accessories. . . . . .page 18-16
TeSys F replacement coils and parts . . . . . pages 18-13, 18-18, 18-20
Dimensions . . . . . .page 18-42

E164862
CCN NLDX

LR43364
Class 3211 04

© 2009 Schneider Electric
All Rights Reserved

Front Mounted Auxiliary Blocks (shown on TeSys D contactor)

Table 18.15: Standard, instantaneous auxiliary contact blocks

Snap-On Mounting	Number of Contacts	Composition N.O.	Composition N.C.	Catalog Number ▲	$ Price
To front of LC●DT20–D258 (4P), LC●D09–D150▲ or **To right side of** LC●F	4 ▲	2	2	LADN22 ■	**41.50**
		1	3	LADN13 ■	**41.50**
		4	0	LADN40 ■	**41.50**
		0	4	LADN04 ■	**41.50**
		3	1	LADN31 ■	**41.50**
		2 ♦	2 ♦	LADC22 ■♦	**41.50**
	2	1	1	LADN11 ■	**20.70**
		2	0	LADN20 ■	**20.70**
		0	2	LADN02■	**20.70**
To front of LC●D80 and D115 or **To left side of** LC●F	1	1	0	LADN10 ★	**13.10**
		0	1	LADN01 ★	**13.10**
To side of LC●D09 to D150 only (not for use on TeSys F)	2	1	1	LAD8N11 ▼	**20.70**
		2	0	LAD8N20 ▼	**20.70**

▲ For low consumption coils (LC1D09 to D32 only), only one front-mounted two-contact block allowed. No side-mounted contact blocks allowed.
■ For spring terminal versions of these blocks, add a "3" to the end of the catalog number. (Ex. LADN223). No price adder for this modification.
♦ Including 1 N.O. + 1 N.C. make before break overlapping contacts.
★ This block cannot be added to the LC1D 09 to D32 contactors; a maximum of 2 blocks can be mounted on the LC1D40A to LC1/LP1D80 contactors only.
▼ 1 block may be added to the left side of the LC1D 09 to D32, AC coils only; 1 block may be added to each side of the LC1D 40A to D80 contactors, AC coils only. Cannot be installed on TeSys D contactors with DC coils.

Table 18.16: Instantaneous blocks with dust-tight auxiliary contacts (IP54) NEMA 12

Snap-On Mounting	Standard Contacts N.O.	Standard Contacts N.C.	Dusttight Contacts N.O.	Dusttight Contacts N.C.	Catalog Number	$ Price
To front of LP●D40–D80, LC●DT20–D258 (4P), LC●D09 to D80 or **To right side of** LC●F	—	—	2	—	LA1DX20	**65.00**
	2	—	2	—	LA1DZ40	**82.00**
	1	1	2	—	LA1DZ31	**82.00**
	—	—	2	—	LA1DY20△	**77.00**

△ Device supplied with 4 ground terminal points.

Table 18.17: Pneumatic time delay contact blocks

Snap-On Mounting	Time Delay Contacts N.O.	Time Delay Contacts N.C.	Type	Range of Time Delay	Catalog Number ◊	$ Price
To front of LP●D40–D80, LC●DT20–D258 (4P), LC●D09 to D150 or **To right side of** LC●F	1	1	On energization (on delay)	0.1 to 3 s□	LADT0	**131.00**
				0.1 to 30 s	LADT2	**131.00**
				10 to 180 s	LADT4	**131.00**
				1 to 30 s☆	LADS2	**131.00**
	1	1	On de-energization (off-delay)	0.1 to 3 s□	LADR0	**131.00**
				0.1 to 30 s	LADR2	**131.00**
				10 to 180 s	LADR4	**131.00**

□ Scale range is expanded between 0.1 and 0.6 seconds on the dial for more accurate settings at the lower end of the range.
◊ For spring terminal versions of these blocks, add a "3" to the end of the catalog number. (Ex. LADT23). No price adder for this modification.
☆ With switching time of 40 ms ± 15 ms between the opening of the N.C. contact to the closing of the N.O. contact.

Table 18.18: Mechanical latch blocks with manual or electrical unlatch (TeSys D only)

Front snap-on mounting onto	Application	Catalog number to be completed by the code corresponding to the coil voltage	$ Price
LC●D09 to D65A	For silent operation and energy conservation	LAD6K10▽◒	**77.00**
LC1 D80 to D150 LP1 D80	For silent operation and energy conservation	LA6DK20▽◒	**77.00**

▽ Does not include internal coil clearing contact.
◒ Complete catalog number by adding coil voltage code. For example: LAD6K10F.

Table 18.19: Coil Voltage Codes for LA6DK mechanical latch blocks

Volts	12	24	32/36	42/48	60/72	100	110/127	200/208	220/240	380/415	440/480	500/600
AC or DC	J	B	C	E	EN	K	F	L	M	Q	R	S

TeSys D contactors . . . . . pages 18-4, 18-6
TeSys D overload relay accessories . . . . . page 18-16
TeSys D replacement coils . . . . . pages 18-18 to 18-19
Dimensions. . . . . pages 18-40 to 18-46

E164862
CCN NLDX

LR43364
Class 3211 04

© 2009 Schneider Electric
All Rights Reserved

RC Coil Suppressor

LA4DA1U

- Limitation of transient voltage to 300% of nominal voltage maximum
- Oscillating frequency limited to 400 Hz maximum. Slight increase in drop-out time (1.2 to 2 times normal)

Table 18.20: Resistor/capacitor circuit (RC) for reduction of "electrical noise" in AC contactor coils

Installed by	Mounting on	Operating voltage 50/60 Hz	Catalog Number	$ Price
Snapping into cavity on right side without tools■	LC1D09 to LC1D32 (3P) LC●DT20 to DT40 (4P),	24–28 V	LAD4RCE	26.20
		50–127 V	LAD4RCG	26.20
		110–240 V	LAD4RCU	26.20
Snap-on mounting and connection without tools to the contactor coil terminals	LC1D40A to LC1D65A (3P), LC1DT60A to LC1DT80A (4P)	24-48 V	LAD4RC3E	26.20
		50-127 V	LAD4RC3G	26.20
		110-240 V	LAD4RC3U	26.20
		380-415 V	LAD4RC3N	26.20
Screw connection to the contactor coil terminals	LC●D80 to D150 (3 or 4P) LC●D80 to D115 (4P)	24–48 V	LA4DA2E	26.20
		50–127 V	LA4DA2G	26.20
		110–240 V	LA4DA2U	26.20
		380–415 V	LA4DA2N	26.20

Varistor Coil Suppressor

LA4DA2U

- Limitation of transient voltage value to 200% of nominal voltage maximum
- Maximum reduction of transient voltage peaks. Slight increase in drop-out time (1.1 to 1.5 times normal)

Table 18.21: Varistor (peak limiting) for reduction of "electrical noise" in AC or DC contactor coils

Installed by	Mounting on	Operating voltage 50/60 Hz	Catalog Number	$ Price
Snapping into cavity on right side without tools■	LC●D09 to D32▲ TeSys D contactors	24–48 V	LAD4VE	26.20
		50–127 V	LAD4VG	26.20
		110–250 V	LAD4VU	26.20
Snap-on mounting and connection without tools to the contactor coil terminals	LC1D40A to LC1D65A (3P), LC1DT60A to LC1DT80A (4P)	24-48 V	LAD4V3E	26.20
		50-127 V	LAD4V3G	26.20
		110-250 V	LAD4V3U	26.20
Screw connection to the contactor coil terminals	LC●D80 to D115 (3P or 4P) LC●D12, D25 (4P)	24–48 Vac	LA4DE2E	26.20
		50–127 Vac	LA4DE2G	26.20
		110–250 Vac	LA4DE2U	26.20
Screw connection to the contactor coil terminals	LC●D80 (3P or 4P)	24–48 Vdc	LA4DE3E	26.20
		50–127 Vdc	LA4DE3G	26.20
		110–250 Vdc	LA4DE3U	26.20

▲ For DC coils 3-pole contactors are fitted with built-in surge suppression as standard.

Diode Coil Suppressor

LA4DC3U

- No overvoltage or oscillating frequency
- Polarized component. Increased drop-out time (6 to 10 times normal)

Table 18.22: Diode for reduction of "electrical noise" in DC contactor coils

Installed on the upper part by	Mounting on	Operating voltage DC	Catalog Number	$ Price
Snap-on mounting and connection w/o tools to the contactor coil terminals	LC●D09 - D32	24–250 V	LAD4DDL	26.20
Clip-on front mounting	LC●D40A to D65, D65A to DT80A	24–250 V	LAD4D3U	26.20
Screw connection of wire to the contactor coil terminals	D80 (3P) D80 (4P)	24–250 V	LA4DC3U	26.20

Bidirectional Diode Coil Suppressor

- Protection provided by limiting the transient voltage to 2 Uc max.
- Maximum reduction of transient voltage peaks

Table 18.23: Bidirectional peak limiting diode

Installed by	Mounting on	Operating Voltage 50/60 Hz and DC	Catalog Number	$ Price
Snapping into cavity on right side of contactor ■	LC●D09 to LC●D32 (3P)♦ DT20 to DT40 (4P)	24 (AC only)	LAD4TB	26.20
		72 (AC only)	LAD4TS	26.20
Clip-on front mounting and connection without tools to the contactor coil terminals ♦	LC1D40A to LC1D65A (3P), LC1DT60A to LC1DT80A (4P)	12 - 24 V	LAD4T3B	26.20
		25 - 72 V	LAD4T3S	26.20
		73 - 125 V	LAD4T3G	26.20
		126 - 250 V	LAD4T3U	26.20
		251 - 440 V	LAD4T3R	26.20
Screw Mounting ★	LC●D80	24 (AC only)	LA4DB2B	56.00
		72 (AC only)	LA4DB2S	26.20
		24 (DC only)	LA4DB3B	56.00
		72 (DC only)	LA4DB3S	56.00

■ Installing suppressor into the cavity makes the electrical connection. Overall width of contactor remains the same.
♦ For LC●D09 through LC●D65A with DC or low consumption DC coils, 3-pole contactors are fitted with built-in bidirectional diode suppression as standard.
★ Mounting at the top of the contactor on coil terminals A1 and A2.

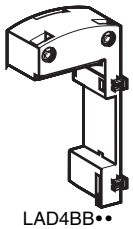
LAD4BB••

Table 18.24: Cabling Accessories

Usage	Mounting on	Operating voltage 50/60 Hz		Catalog Number	$ Price
For adapting existing wiring to a new product or for use with top mount accessory.	LC1D09 to D38 LC1DT20 to DT60 AC only	Without coil suppression		LAD4BB	23.00
		With coil suppression (varistor)	24-48 V	LAD4BBVE	23.00
			50-127 V	LAD4BBVG	23.00
			110-250 V	LAD4BBVU	23.00
For adapting existing wiring to a new product or for use with top mount accessory	LC1D40A to LC1D65A (with no coil suppressor)	—		LAD4BB3	26.20

TeSys D contactors . . . . . pages 18-4, 18-6
TeSys D overload relay accessories. . . . . .page 18-16
TeSys D replacement coils . . . . . pages 18-18 to 18-19
Dimensions . . . . . pages 18-40 to 18-46

© 2009 Schneider Electric
All Rights Reserved

The following accessories require use of cabling accessories (LAD4BB●●) for proper mounting. See page 18-9 for illustration.

Electronic Serial Timer Modules

These solid state modules delay the energizing and de-energizing of the contactor coil.

Table 18.25:

Type	Operational Voltage ▲		Time Delay	Catalog Number	$ Price
	24–250 Vac	100–250 Vac			
On-delay	LC1D09–D65A	LC1D80–D150	0.1–2 s	LA4DT0U	82.
			1.5–30 s	LA4DT2U	82.
			25–500 s	LA4DT4U	82.

▲ For 24 V operation, the contactor must be fitted with a 21 V coil: coil voltage code Z5 for 50 Hz; Z6 for 60 Hz; ZD for DC.

Interface Modules ■

These modules allow the contactor coils to be energized from low voltage and low current level signals. They come in mechanical relay and solid state versions. The relay plus manual operation versions include a lever for manually turning the contactor on and off. When a module receives a low level signal, it allows the separate sourced control voltage to flow to the contactor coil. It saves space and wiring time compared to conventional interposing relays.

LA4DFB

Table 18.26:

Interface Type	Operational Voltage		Input Voltage	Catalog Number	$ Price
	24–250 Vac	100–250 Vac			
Relay	LC1D09–D150		24 Vdc	LA4DFB	55.
	LC1D09–D150		48 Vdc	LA4DFE	55.
Relay Plus Manual Operation	LC1D09–D150		24 Vdc	LA4DLB	71.
	LC1D09–D150		48 Vdc	LA4DLE	71.
Solid State	LC1D09–D65	LC1D80–D115	24 Vdc	LA4DWB	71.

■ Adapter required for D09 - D65A, see table 18.24.

Automatic-Manual-Stop Control Modules

These modules allow for local and/or remote operation of the contactor coil. Each module includes a lever to switch from automatic to manual operation and a dial to turn the contactor on and off.

Table 18.27:

Operational Voltage		Catalog Number	$ Price
24–100 Vac	100–250 Vac		
LC1D09–D150	—	LA4DMK	35.

Low Voltage Ride Through Module (meets SEMI F47 requirements)

By ensuring SEMI F47 compliance of AC powered IEC contactors and relays, the low voltage ride through modules can be used to increase the voltage sag immunity of semiconductor processing equipment. These modules make it possible for AC powered Telemecanique contactors and relays to exceed the requirements of SEMI F47, both in the magnitude and duration of a voltage sag event—even with accessories such as auxiliary contact blocks and pneumatic timers.

The low voltage ride through modules can be used with Telemecanique contactors from 9 A through 80 A, as well as the CAD series of control relays

Table 18.28:

For use on:		Catalog Number	$ Price
Contactor	Relay		
LC1D●●B7	CAD●●B7	LADLVRT24V ♦	124.
LC1D●●G7	CAD●●G7	LADLVRT120V ♦	124.
LC1D●●LE7	CAD●●LE7	LADLVRT208V ♦	124.
Top mount bracket (**required** when using above modules) D09 - D32		LAD4BB ♦	23.
Top mount bracket (**required** when using above modules) D40 - D65		LAD4BB3 ♦	23.
Fuse		LA9D941	120.

♦ LAD4BB must be used when the low voltage ride through module is being used with contactors 32 A and less, and TeSys CAD Series of Control Relays. The LAD4BB3 must be used with the D40 - D65A. See table 18.24 on page 18-10.

TeSys D contactors . . . . . .pages 18-4, 18-6
TeSys D overload relay accessories . . . . . page 18-16
TeSys D replacement coils. . . . . pages 18-18 to 18-19
Dimensions. . . . . pages 18-40 to 18-46

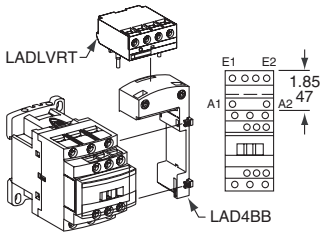

Contactors 32 A and less

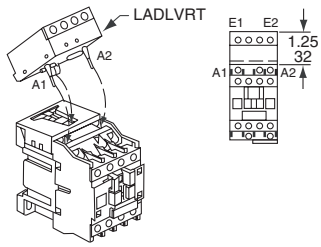

Contactors 40 A–80 A

© 2009 Schneider Electric
All Rights Reserved

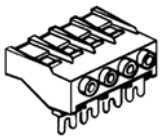
LA9D1260

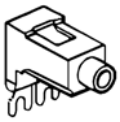
LA9D2561

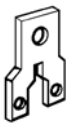
LA9D40961

LA9D6567

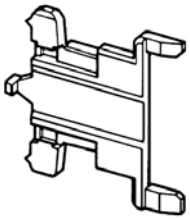
LA9D511

Table 18.29: For Power Pole or Control Connection

Description			For use with contactors LC1/LP1	Sold in lots of	Catalog Number	$ Price each
Connectors for larger cable sizes	4 poles	#8 AWG (10 mm^2)	D09, D12	1	LAD92560	**8.70**
	3 poles	#4 AWG (25 mm^2)	D09–D32	1	LA9D3260	**12.00**
Everlink® terminal block	3 poles		D40A-D65A	1	LAD96560	**10.00**
Links for the parallel connection of	2 poles		D09–D32	10	LA9D2561	**26.20**
			D40A–D65A	1	LAD9P32	**6.00**
			D80	2	LA9D80961	**6.50**
			F115	4	LA9FF602	**55.00**
			F150, F185	4	LA9FG602	**65.00**
			F265, F330, F400	4	LA9FH602	**169.00**
			F500	4	LA9FK602	**228.00**
			F630, F800	4	LA9FL602	**278.00**
	3 poles (Wye-Delta Shorting Strap)		D09–D32	10	LAD9P3	**10.00**
			D40A-D65A	1	LAD9P33	**25.00**
			D80	1	LA9D80962	**6.50**
			F115	1	LA9FF601	**6.80**
			F150, F185	1	LA9FG601	**8.20**
			F265, F330, F400	1	LA9FH601	**12.00**
			F500	1	LA9FK601	**21.80**
			F630, F800	1	LA9FL601	**38.20**
	4 poles		DT20, DT25	2	LA9D1263	**8.70**
			D80	2	LA9D80963	**17.50**
Second coil connection			LP1D40–D80	10	LA9D09966	**2.20**
Control circuit take-off from main pole			D115, D150	10	LA9D11567	**4.00**
			D80	10	LA9D8067	**5.50**
Spreaders for increasing pole pitch to 45 mm			D115, D150	3	GV7AC03	**31.10**

Table 18.30: For Marking

Description	For use with contactors LC1/LP1	Sold in lots of	Catalog Number	$ Price each
Reference label holder snap-on 8 x 22 mm	4-pole contactors D80 - D115	100	LA9D92	**.06**
Reference label holder snap-on 8 x 18 mm 3 poles	D09-D65A, DT20-DT80A, LADN, LADT, LADR	100	LAD90	**.06**
Sheet of 300 labels self adhesive 7 x 21 mm	For holder LA9D92	1	LA9D93	**4.30**

Table 18.31: For Mounting

Description	For use with contactors LC1/LP1	Sold in lots of	Catalog Number	$ Price each
Set of shims for mounting LAD8N and LA8DN	D80	1	LA9D511	**9.80**
Retrofit plate for replacement of LC1D40-D65 with LC1D40A-D65A	D40A-D65A	1	LAD7X3	**25.00**
35 mm DIN Rail – 2 meters long	LC1D09 to D80	10	AM1DP200	**5.20**

Table 18.32: Replacement contacts

	For use with contactors		Catalog Number	$ Price
Three-pole	LC1D115	3 poles	LA5D1158031	**239.00**
	LC1D150	3 poles	LA5D150803	**239.00**
Four-pole	LC1D115	4 poles	LA5D115804	**318.00**

Table 18.33: Arc chambers

	For use with contactors		Catalog Number	$ Price
Three-pole	LC1D115	3 poles	LA5D11550	**90.00**
	LC1D150	3 poles	LA5D15050	**90.00**
Four-pole	LC1D115	4 poles	LA5D115450	**119.00**

TeSys D contactors . . . . . pages 18-4, 18-6
TeSys D overload relay accessories. . . . . .page 18-16
TeSys D replacement coils . . . . . pages 18-18 to 18-19
Dimensions . . . . . pages 18-40 to 18-47
TeSys F contactors . . . . . pages 18-5, 18-7
TeSys F replacement coils and parts . . . . . pages 18-13, 18-18, 18-20

© 2009 Schneider Electric
All Rights Reserved

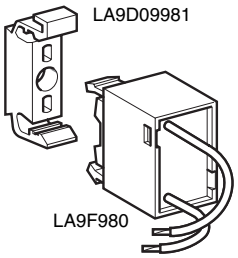

Table 18.34: Suppressor Blocks

Operating limit: up to 220 V, 50/60 Hz coils

Description	For Use		Catalog Number	$ Price
Suppressor block (clip-on mounting to coil)	With coils	LX1FF, FG, FH, F115, F150, F185, F225, F265, F330	LA9F980	**21.80**
	With coils	LX1FJ, FK, FL, FX, F400, F500, F630, F780, LX9FF, FG, FH, F115, F150, F185, F225, F265, F330	LA9D09980	**20.70**
Mounting bracket (for 35 mm DIN rail or panel mounting) for suppressor block			LA9D09981	**5.50**

Table 18.35: Lugs and Lug Kits ▲

Contactor Type LC1	Lug Kit Catalog Number Contactor Only	Cable Size AWG range	Overload Relay	Directly mounted to contactor	Lugs Required		Cable size AWG range	
				LC1•	Line side of contactor	Load side of overload	Line side of contactor	Load side of overload
F115	DZ2FF6	14 to 2/0	LR9F5•57 to F5•69	F115	3 each DZ2FF1	3 each DZ2FG1	14 to 2/0	6 to 3/0
F150, F185	DZ2FG6	6 to 3/0	LR9F5•57 to F5•71	F150 to F185	1 each DZ2FG6		6 to 3/0	
	—		LR9F5•71	F225, F265	1 each DZ2FH6		6 to 300 MCM	
F225, F265, F330	DZ2FH6	6 to 300 MCM	LR9F7•75 to F7•79	F265 or F330	3 each DZ2FH1		6 to 300 MCM	4 to 500 MCM
F400	DZ2FJ6	4 to 500 MCM	LR9F7•75 to F7•81	F400	3 each DZ2FJ1		4 to 500 MCM	4 to 500 MCM
F500	DZ2FK6	2 x 2 to 600 MCM	LR9F7•75 to F7•81	F500	3 each DZ2FK1		2x2 to 600 MCM	4 to 500 MCM
F630, F800	DZ2FL6	3 x 2 to 600 MCM	LR9F7•81	F630	1 each DZ2FL1 DZ2FL2 DZ2FL3	1 each DZ2FR1	3x2 to 600 MCM	4 to 500 MCM
F780	DZ2FX6	4 x 1/0 to 750 MCM	—	—			—	—

▲ Lug kits ending in the number "6" include 6 identical lugs. In some cases the LR9F overload relay mounted directly on the load side of an LC1F contactor will require a different size lug for your choice of contactor and overload. If the two sizes are different, order 3 of each size lug. Mounting hardware (screws, washers, and nuts) are provided with the contactors and overload relays, not with the lugs. See Table 18.37 for pricing.

Table 18.36: Lugs—2 and 4-Pole ♦

Contactor Type LC1	Lug Kit Catalog Number	Qty. Required		AL/CU Cable Size
		2-Pole	4-Pole	
F115	DZ2FF1	4	8	14 to 2/0
F150, F185	DZ2FG1	4	8	6 to 3/0
F225, F265, F330	DZ2FH1	4	8	6 to 300 MCM
F400	DZ2FJ1	4	8	4 to 500 MCM
F500	DZ2FK1	4	8	2 X 2 to 600 MCM
F630	DZ2FL■	■	■	3 X 2 to 600 MCM
F780	DZ2FX1	4	8	4 X 1/0 to 750 MCM

■ For 2-pole F630 contactors, order 2 DZ2FL1 (L1 and T2), and 2 DZ2FL3 (L2 and T1).
For 4-pole F6304, order 2 DZ2FL1 (L1 and T4), 4 DZ2FL2 (L2, T2, L3, T3) and 2 DZ2FL3 (L4 and T1).

♦ Lugs for LC1F contactors and overload relays must be ordered separately. Each kit consists of one (1) lug. Mounting hardware (screws, washers, nuts) are provided with the contactors, not the lugs. See Table 18.37 for pricing.

Table 18.37: Lugs Pricing

Lug Catalog Number	$ Price
DZ2FF6	**39.30**
DZ2FG6	**65.00**
DZ2FH6	**65.00**
DZ2FJ6	**65.00**
DZ2FK6	**131.00**
DZ2FL6	**164.00**
DZ2FX6	**163.80**
DZ2FF1	**6.50**
DZ2FG1	**11.00**

Lug Catalog Number	$ Price
DZ2FH1	**11.00**
DZ2FJ1	**11.00**
DZ2FK1	**21.80**
DZ2FL1	**27.30**
DZ2FL2	**55.00**
DZ2FL3	**27.30**
DZ2FR1	**173.30**
DZ2FX1	**27.30**

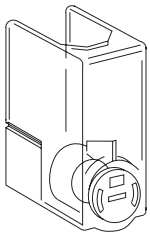

These clear plastic protective shrouds are an effective means to meet international touch-safe requirements for power terminals. They are designed to be used with power cables that have been bolted to the terminal.

NOTE: *The protection shrouds do not attach to contactors or overloads utilizing* ***DZ2F*** *lug kits.*

Table 18.38: Power Terminal Protection Shrouds

For Use With 2-, 3-, And 4-pole Contactors	Number of Shrouds Per Set	Catalog Number	$ Price
LC1F115	6	LA9F701	**42.40**
LC1F150, F185	6	LA9F702	**61.00**
LC1F225, F265, F330, F400 and F4002, F500 and F5002	6	LA9F703	**82.00**
LC1F630, F6302 and F800	6	LA9F704	**93.00**
LC1F1154	8	LA9F706	**58.00**
LC1F1504 and F1854	8	LA9F707	**80.00**
LC1F2254, F2654, F3304, F4004, F5004	8	LA9F708	**111.00**
LC1F6304	8	LA9F709	**120.00**

For contactors LC1F115, LC1F150, and LC1F185, an available touch-safe terminal block may be used in place of lugs for power connections.

Table 18.39: Insulated Terminal Blocks

For contactor type LC1	For overload relay LR9	Maximum Cable Size	Catalog Number	$ Price
F115, F150, F185	F5•57, F5•63, F5•67, F5•69	300 MCM	LA9F103	**55.00**

TeSys F contactors . . . . . .pages 18-5, 18-7
TeSys F overload relay accessories . . . . . page 18-16
TeSys F replacement coils and parts . . . . . .pages 18-18, 18-18, 18-20
Dimensions. . . . . pages 18-40 to 18-47

© 2009 Schneider Electric
All Rights Reserved

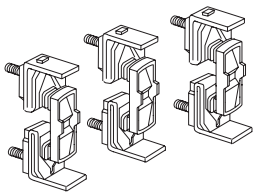
LA5FG431

Table 18.40: Replacement contact sets ▲

	For use on contactors		Catalog Number	$ Price
Two-pole	LC1F4002	2 poles	LA5F400802	717.
	LC1F5002	2 poles	LA5F500802	1111.
	LC1F6302	2 poles	LA5F630802	1651.
Three-pole	LC1F115, F150	3 poles	LA5FF431	239.
	LC1F185	3 poles	LA5FG431	418.
	LC1F265	3 poles	LA5FH431	793.
	LC1F330, F400	3 poles	LA5F400803	1076.
	LC1F500	3 poles	LA5F500803	1589.
	LC1F630	3 poles	LA5F630803	2488.
	LC1F780	1 pole	LA5F780801★	1651.
	LC1F800	3 poles	LA5F800803	2488.
Four-pole	LC1F1504, F1154	4 poles	LA5FF441	318.
	LC1F1854	4 poles	LA5FG441	549.
	LC1F2654	4 poles	LA5FH441	966.
	LC1F3304, F400, F4004	4 poles	LA5F400804	1435.
	LC1F5004	4 poles	LA5F500804	2461.
	LC1F6304	4 poles	LA5F630804	3304.
	LC1F7804	1 pole	LA5F780801★	1651.

LA5F11550

Table 18.41: Arc chambers

	For use on contactors		Catalog Number	$ Price
Two-pole	LC1F4002	2 poles	LA5F400250	280.
	LC1F5002	2 poles	LA5F500250	305.
	LC1F6302	2 poles	LA5F630250	431.
Three-pole	LC1F115	3 poles	LA5F11550	90.
	LC1F150	3 poles	LA5F15050	101.
	LC1F185	3 poles	LA5F18550	179.
	LC1F265	3 poles	LA5F26550	269.
	LC1F330	3 poles	LA5F33050	287.
	LC1F400	3 poles	LA5F40050	305.
	LC1F500	3 poles	LA5F50050	341.
	LC1F630	3 poles	LA5F63050	646.
	LC1F780	1 pole	LA5F780150★	431.
	LC1F800	3 poles	LA5F80050	750.
Four-pole	LC1F1154	4 poles	LA5F115450	119.
	LC1F1504	4 poles	LA5F150450	131.
	LC1F1854	4 poles	LA5F185450	248.
	LC1F2654	4 poles	LA5F265450	299.
	LC1F3304	4 poles	LA5F330450	414.
	LC1F4004	4 poles	LA5F400450♦	573.
	LC1F5004	4 poles	LA5F500450♦	610.
	LC1F6304	4 poles	LA5F630450■	861.
	LC1F7804	1 pole	LA5F780150★	431.

▲ Supplied per pole are: 2 fixed contacts, 1 moving contact, 2 deflectors, 1 backplate, mounting screws and washers.
■ Comprises single-pole components.
♦ Comprises 2-pole components.
★ 2 identical components per pole are supplied.

TeSys F contactors . . . . . pages 18-5, 18-7
TeSys F overload relay accessories . . . . . .page 18-16
TeSys F replacement coils and parts . . . . . pages 18-13, 18-18, 18-20
Dimensions . . . . . pages 18-42 to 18-47

© 2009 Schneider Electric
All Rights Reserved

Table 18.42: Contactors

Reversing contactors comprising two identical, horizontally mounted contactors:	Mechanical interlock: Without electrical interlock		Mechanical interlock: With incorporated electrical interlock (2 N.C. contacts)		Set of power connections: Reversing contactors for motor control		Set of power connections: Four pole contactors	
	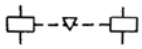		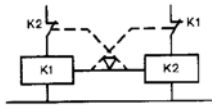		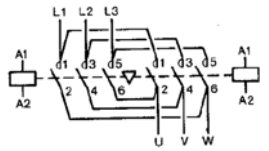		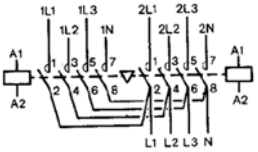	
	Catalog Number	$ Price	Catalog Number	$ Price	Catalog Number	$ Price	Catalog Number	$ Price
LC1D09, LC1D12, LC1D18, LC1D25, LC1D32	LAD9R1▼	32.10	LAD9R1V▼	45.50	Included with kit		Not Available	
LC1DT20, LC1DT25, LC1DT32, LC1DT40	LADT9R1▼	36.90	LADT9R1V▼	45.50	Not Available		Included with kit	
	▼ Kit including mechanical interlock and wiring.							
	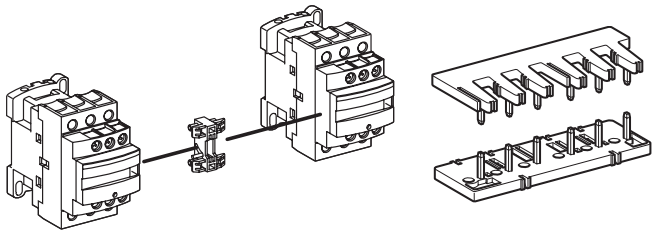							
LC1D40, LC1D50, LC1D/LP1D65	LA9D50978	31.70	LA9D4002	45.90	LA9D6569	53.00	LA9D6570	63.00
LC1D40A, D50A, D65A	LAD4CM	45.00	Not Available		LA9D65A69	75.00	Not Available	
	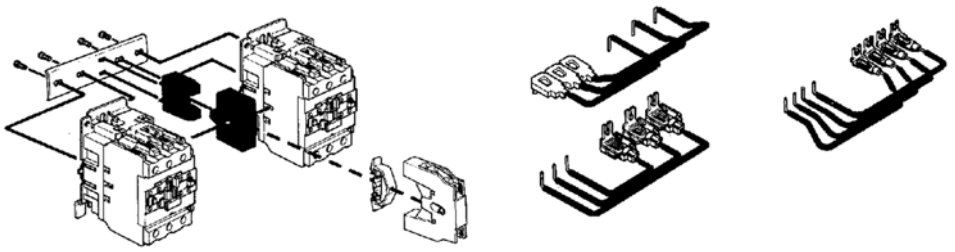							
LC1D80 AC coil	LA9D50978	31.70	LA9D4002	45.90	LA9D8069	65.00	LA9D8070	79.00
LC1D80 DC coil	LA9D80978	31.70	LA9D8002	65.00	LA9D8069	65.00	LA9D8070	79.00
	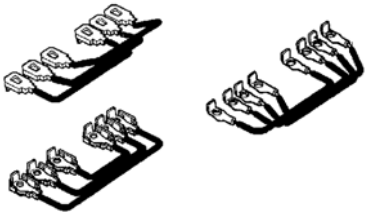							
LC1D115 and LC1D150	Not Available		LA9D11502	78.00	LA9D11569	129.00	LA9D11571 (3P)	53.00
							LA9D11570 (4P) (D115 only)	53.00
	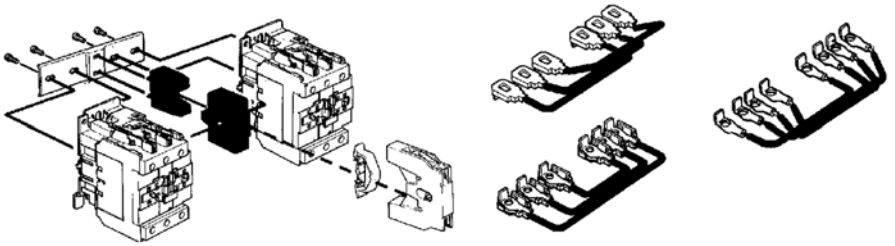							

TeSys D contactors . . . . . .pages 18-4, 18-6
TeSys D overload relay accessories . . . . . page 18-16
TeSys D replacement coils. . . . . pages 18-17 to 18-19
Dimensions. . . . . pages 18-40 to 18-46

© 2009 Schneider Electric
All Rights Reserved

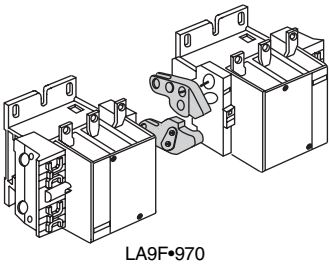
LA9F•970

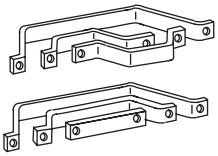
LA9F•976

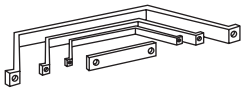
LA9F•977

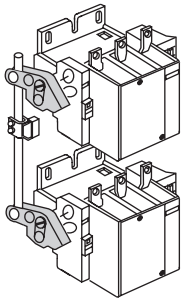
LA9F•4•

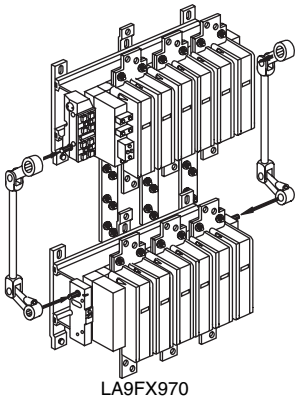
LA9FX970

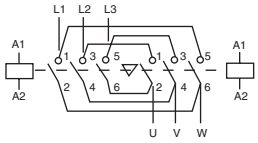

Reversing (motors) Application

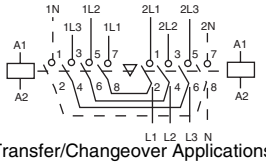

Transfer/Changeover Applications

Table 18.43: Component parts for the assembly of F-Line 3-pole reversing contactors

With 2 Identical Contactors ▲	Set of Power Connections Catalog Number	$ Price	Mechanical Interlock Kit Catalog Number	$ Price
Horizontal Mounting				
LC1F115	LA9FF976	106.00	LA9FF970	53.00
LC1F150	LA9F15076	96.00	LA9FF970	53.00
LC1F185	LA9FG976	113.00	LA9FG970	53.00
LC1F265	LA9FH976	151.00	LA9FJ970	76.00
LC1F330	LA9FJ976	225.00	LA9FJ970	76.00
LC1F400	LA9FJ976	225.00	LA9FJ970	76.00
LC1F500	LA9FK976	306.00	LA9FJ970	76.00
LC1F630 or F800	LA9FL976	568.00	LA9FL970	76.00
Vertical Mounting				
LC1F115 or F150	★	—	LA9FF4F	97.00
LC1F185	★	—	LA9FG4G	113.00
LC1F265	★	—	LA9FH4H	126.00
LC1F330	★	—	LA9FJ4J	149.00
LC1F400	★	—	LA9FJ4J	149.00
LC1F500	★	—	LA9FK4K	149.00
LC1F630 or F800	★	—	LA9FL4L	149.00
LC1F780	■	—	LA9FX970 ■	508.00

Table 18.44: Component parts for the assembly of TeSys F 3-pole or 4-pole transfer contactors

Horizontal Mounting	Set of Power Connections		$ Price	Mechanical Interlock Kit Catalog Number	$ Price
	Three-Pole	Four-Pole			
LC1F115/4	LA9FF982	LA9FF977	53.00	LA9FF970	53.00
LC1F150/4	LA9F15082	LA9F15077	53.00	LA9FF970	53.00
LC1F185/4	LA9FG982	LA9FG977	53.00	LA9FG970	53.00
LC1F265/4	LA9FH982	LA9FH977	83.00	LA9FJ970	76.00
LC1F330/4	LA9FJ982	LA9FJ977	113.00	LA9FJ970	76.00
LC1F400/4	LA9FJ982	LA9FJ977	113.00	LA9FJ970	76.00
LC1F500/4	LA9FK982	LA9FK977	154.00	LA9FJ970	76.00
LC1F630/4	LA9FL982	LA9FL977	233.00	LA9FL970	76.00
Vertical Mounting					
LC1F115/4	★	★	—	LA9FF4F	97.00
LC1F185/4	★	★	—	LA9FG4G	113.00
LC1F265/4	★	★	—	LA9FH4H	149.00
LC1F330/4	★	★	—	LA9FJ4J	149.00
LC1F400/4	★	★	—	LA9FJ4J	149.00
LC1F500/4	★	★	—	LA9FK4K	149.00
LC1F630/4	★	★	—	LA9FL4L	149.00
LC1F780/4	■	♦	—	LA9FX970 ♦	508.00

Table 18.45: Vertical mounting of 2 contactors of different ratings ▲

Upper Contactor	Lower Contactor ▼	Mechanical Interlock Kit Catalog Number	$ Price
LC1F185 or 1854	LC1F115/150 or 1154/1504	LA9FG4F	113.00
LC1F265 or 2654	LC1F115/150 or 1154/1504	LA9FH4F	126.00
LC1F330 or 3304	LC1F185/1854 or 265/265A	LA9FH4G	126.00
LC1F400 or 4004	LC1F115/150 or 1154/1504	LA9FJ4F	126.00
	LC1F185 or 1854	LA9FJ4G	126.00
	LC1F265/2654 or 330/330A	LA9FJ4H	149.00
LC1F500 or 5004	LC1F115/150 or 1154/1504	LA9FK4F	149.00
	LC1F185 or 1854	LA9FK4G	126.00
	LC1F265/2654 or 330/330A	LA9FK4H	149.00
	LC1F400 or 4004	LA9FK4J	149.00
LC1F630, 6304 or LC1F800	LC1F115/150 or 1154/1504	LA9FL4F	116.00
	LC1F185 or 1854	LA9FL4G	126.00
	LC1F265/2654 or 330/330A	LA9FL4H	149.00
	LC1F400 or 4004	LA9FL4J	149.00
	LC1F500 or 5004	LA9FL4K	149.00

▲ With identical or different numbers of poles.
■ Double mechanical interlock with 2 mechanical links and 3 power connection bars.
♦ Double mechanical interlock with 2 mechanical links and 4 power connection bars.
★ Power connection to be assembled by the customer, except for contactors LC1F780 and F7804.
▼ Lower contactor must have equal or lower current rating.

TeSys F contactors . . . . . pages 18-5, 18-7
TeSys F overload relay accessories. . . . . .page 18-16
TeSys F replacement coils and parts . . . . . .pages 18-18 to 18-20
Dimensions . . . . . .pages 18-42 to 18-47

© 2009 Schneider Electric
All Rights Reserved

TeSys D Overload Relay Accessories

LA7D901

Table 18.46: Mounting Kits and Plates▲

Description	For use with overload relays:	Catalog Number	$ Price
Separate mounting kits for mounting to 35 mm DIN rail or for panel mounting with screws	LRD01–35 and LR3D01–35	LAD7B10	8.70
	LRD01–35 and LRD01–35 for ring tongue terminals	LAD7B106	8.70
	LRD15••	LAD7B105	10.40
	LR2D15••	LA7D1064	8.70
	LR2D25••	LA7D2064	13.10
	LRD3•••, LR3D3•••, LR2D35••	LA7D3064	17.50
Mounting plates for screw mounting at 110 mm (4.3") centers	LRD01–35, LR3D01–35, LR2D15••	DX1AP25	11.00
	LR2D25••	DX1AP26	12.00
	LRD3•••, LR3D3••, LR2D35••	LA7D902	16.40

▲ When using mounting plates, separate mounting kits are also required.

LA7D03

Table 18.47: Accessories

Description	For use with	Standard Packaging	Catalog Number	$ Price
Pre wiring kit allows direct connection of the N.C. contact of relay LRD01–D32 or LR3D01–D32 to the contactor	LC1D09 through D18	10	LAD7C1	8.70
	LC1D25, D32	10	LAD7C2	8.70
Stop button locking device	All relays except LRD01–D32, LR3D01–D32 and LR9D	10	LA7D901	2.20
Remote stop/tripping or electrical reset♦	LRD01-D32, LRD3, LR3D01-D32, LR3D3	1	LAD703■	43.70
	All relays except LRD01–D32, LR3D01–D31	1	LA7D03■	43.70
Reset by flexible cable 500 mm (19.6 in.)	LRD01-D32, LRD3, LR3D3	1	LAD7305	100.00

■ Part number to be completed by adding coil voltage code. For example: LAD703F.

Table 18.48: Control Circuit Voltages for LA7D03 and LAD703

Volts	12	24	48	110	220/230	380/400	415/440
AC 50/60 Hz	J★	B	E	F	M	Q	N
DC	J	B	E	F	M	—	—

♦ The time that the LA7D03 can remain energized depends on its rest time; 1 s pulse with 9 s rest time; 5 s pulse with 30 s rest time; 10 s pulse with 90 s rest time; maximum pulse duration of 20 s with rest time of 300 s. Consumption on inrush and sealed: < 100 VA

★ Not available for LRD01-D32, LR3D01-D32.

TeSys F Overload Relay Accessories

LA7F90•

Table 18.49: Mounting plate for overload relay

For use with relays	Catalog Number	$ Price
LR9F5•57, F5•63, F5•67, F5•69 and F5•71	LA7F901	27.30
LR9F7•75, F7•79 and F7•81	LA7F902	38.20

These clear plastic protective shrouds are an effective means to meet international finger-safe requirements for power terminals. They are designed to be used with power cables that have been bolted to the terminal.

NOTE: *The protection shrouds do not attach to contactors or overloads utilizing DZ2F lug kits.*

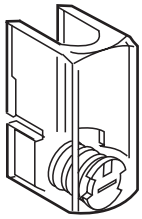

LA9F70•

Table 18.50: Power terminal protection shrouds, single-pole

For use with relays	Catalog Number	$ Price
LR9F5•57	LA9F701	42.40
LR9F5•63, F5•67, F5•69	LA9F702	61.00
LR9F5•71	LA9F705	86.00
LR9F7•75, F7•79, F7•81	LA9F703	82.00

Table 18.51: Power terminal protection shrouds, 3-pole

For use with relays	Catalog Number	$ Price
LR9F5•57, F5•63, F5•67, F5•69	LA7F701	27.30
LR9F5•71	LA7F702	38.20
LR9F7•75, F7•79, F7•81	LA7F703	49.20

LA7F701

Table 18.52: Connection accessories (for mounting overload relays beneath reversing contactors)▼

Application		Set of 3 bars Catalog Number	$ Price
For relays	For contactor		
LR9F5•57, F5•63, F5•67, F5•69	LC1F115	LA7F401	19.70
LR9F5•57, F5•63	LC1F150 and F185	LA7F402	21.80
LR9F5•71	LC1F265	LA7F403	27.30
LR9F7•75, F7••79	LC1F265...F400	LA7F404	30.50
LR9F7•81	LC1F400	LA7F404	30.50
LR9F7•75, F7•79, F7•81	LC1F500	LA7F405	38.20
LR9F7•81	LC1F630	LA7F406	43.70

▼ Mounting plate required.

Table 18.53: Marking accessories

Description	Sold in units of:	Catalog Number	$ Price
Marker holder, snap-in	100	LA7D903	.03 each

Main overload selection . . . . . .pages 18-2, 18-3
Dimensions. . . . . pages 18-45 to 18-47
TeSys T. . . . . pages 16-91

© 2009 Schneider Electric
All Rights Reserved

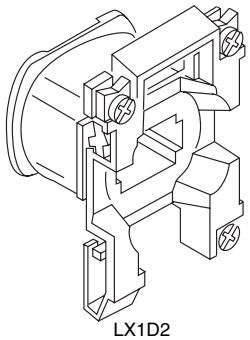
LX1D2

Table 18.54: For LC1D09–D32, LC1DT20–40 (TeSys D) Contactors and CAD Relays

Rated Nominal Voltage	Catalog Number 50/60 Hz	$ Price
12	LXD1J7	
21▲	LXD1Z7	
24	LXD1B7	26.20
32	LXD1C7	
36	LXD1CC7	
42	LXD1D7	
48	LXD1E7	
60	LXD1EE7	26.20
100	LXD1K7	
110	LXD1F7	
115	LXD1FE7	
120	LXD1G7	
127	LXD1FC7	26.20
200	LXD1L7	
208	LXD1LE7	
220/230	LXD1M7	
230	LXD1P7	
230/240	LXD1U7	26.20
277	LXD1W7	
380/400	LXD1Q7	
400	LXD1V7	
415	LXD1N7	
440	LXD1R7	26.20
480	LXD1T7	
575	LXD1SC7	
600	LXD1X7	26.20
690	LXD1Y7	

Specifications	50/60 Hz
Average consumption - Inrush (inductance .75) - Sealed (inductance .3)	70 VA 7 VA
Operating range@ 60° C	80–110% of nominal @ 50 Hz, 85–110% of nominal @ 60 Hz

▲ Voltage for special coils fitted in contactors with serial timer modules, with 24 V supply.

Table 18.55: For LC1D09, D12, D18—For old D2 style contactors where the catalog number includes the auxiliary contact arrangement

Rated Nominal Voltage V	Catalog Number 50 Hz	Catalog Number 60 Hz	Catalog Number 50/60 Hz	$ Price
21 ■	LX1D2Z5	LX1D2Z6	LX1D2Z7	
24	LX1D2B5	LX1D2B6	LX1D2B7	
32	LX1D2C5	—	—	52.40
42	LX1D2D5	—	LX1D2D7	
48	LX1D2E5	LX1D2E6	LX1D2E7	
110	LX1D2F5	LX1D2F6	LX1D2F7	
120	—	LX1D2G6	LX1D2G7	
127	LX1D2G5	—	—	52.40
208	—	LX1D2L6	—	
220	LX1D2M5	LX1D2M6	LX1D2M7	
230	LX1D2P5	—	LX1D2P7	
240	LX1D2U5	LX1D2U6	LX1D2U7	
256	LX1D2W5	—	—	52.40
277	—	LX1D2W6	—	
380	LX1D2Q5	LX1D2Q6	LX1D2Q7	
400	LX1D2V5	—	LX1D2V7	
415	LX1D2N5	—	LX1D2N7	
440	LX1D2R5	LX1D2R6	LX1D2R7	52.40
480	—	LX1D2T6	—	
500	LX1D2S5	—	—	
575	—	LX1D2S6	—	
600	—	LX1D2X6	—	52.40
660	LX1D2Y5	—	—	

Specifications	50 Hz	60 Hz	50/60 Hz
Average consumption Inrush (inductance .75)	60 VA	70 VA	70 VA at 50 or 60 Hz
Sealed (inductance .3)	7 VA	7.5 VA	8 VA at 50 or 60 Hz
Operating range at θ ≤ 55°C / 131°F	80–110 % of nominal voltage	80–110% of nominal voltage	85–110% of nominal voltage

Table 18.56: For LC1D25, D32—For old D2 style contactors where the catalog number includes the auxiliary contact arrangement

Rated Nominal Voltage (V)	Catalog Number 50 Hz	Catalog Number 60 Hz	Catalog Number 50/60 Hz	$ Price
21■	LX1D4Z5	LX1D4Z6	LX1D4Z7	
24	LX1D4B5	LX1D4B6	LX1D4B7	
32	LX1D4C5	—	—	72.00
42	LX1D4D5	—	LX1D4D7	
48	LX1D4E5	LX1D4E6	LX1D4E7	
110	LX1D4F5	LX1D4F6	LX1D4F7	
120	—	LX1D4G6	LX1D4G7	
127	LX1D4G5	—	—	72.00
208	—	LX1D4L6	—	
220	LX1D4M5	LX1D4M6	LX1D4M7	
230	LX1D4P5	—	LX1D4P7	
240	LX1D4U5	LX1D4U6	LX1D4U7	
256	LX1D4W5	—	—	72.00
277	—	LX1D4W6	—	
380	LX1D4Q5	LX1D4Q6	LX1D4Q7	
400	LX1D4V5	—	LX1D4V7	
415	LX1D4N5	—	LX1D4N7	
440	LX1D4R5	LX1D4R6	LX1D4R7	72.00
480	—	LX1D4T6	—	
500	LX1D4S5	—	—	
575	—	LX1D4S6	—	
600	—	LX1D4X6	—	72.00
660	LX1D4Y5	—	—	

Specifications

	50 Hz	60 Hz	50/60 Hz
Average consumption - Inrush (inductance .75) - Sealed (inductance .3)	90 VA 7.5 VA	100 VA 8.5 VA	100 VA at 50 or 60 Hz 8.5 VA at 50 or 60 Hz
Operating range at θ ≤ 55°C / 131°F	80–110% of nominal voltage	80–110% of nominal voltage	85–110% of nominal voltage

■ For use in 24 volt applications involving serial timer modules refer to page 18-10.

TeSys D overload relay accessories. . . . . .page 18-16
TeSys D replacement coils . . . . . pages 18-17 to 18-19
Dimensions . . . . . pages 18-40 to 18-46

TeSys D contactors . . . . . pages 18-4, 18-6

Limited Stock
Will be replaced with TeSys

© 2009 Schneider Electric
All Rights Reserved

Table 18.57: For old D2 style LC1D40, D50, D65, D80

Rated Nominal Voltage V	Catalog Number 50 Hz	Catalog Number 60 Hz	Catalog Number 50/60 Hz	$ Price
24	LX1D6B5	LX1D6B6	LX1D6B7	**41.50**
32	LX1D6C5	—	—	**41.50**
42	LX1D6D5	—	LX1D6D7	**41.50**
48	LX1D6E5	LX1D6E6	LX1D6E7	**41.50**
110	LX1D6F5	LX1D6F6	LX1D6F7	**41.50**
120	—	LX1D6G6	LX1D6G7	**41.50**
127	LX1D6G5	—	—	**41.50**
208	—	LX1D6L6	LX1D6LE7	**41.50**
220	LX1D6M5	LX1D6M6	LX1D6M7	**41.50**
230	LX1D6P5	—	LX1D6P7	**41.50**
240	LX1D6U5	LX1D6U6	LX1D6U7	**41.50**
256	LX1D6W5	—	—	**170.00**
277	—	LX1D6W6	—	**41.50**
380	LX1D6Q5	LX1D6Q6	LX1D6Q7	**41.50**
400	LX1D6V5	—	LX1D6V7	**41.50**
415	LX1D6N5	—	LX1D6N7	**41.50**
440	LX1D6R5	LX1D6R6	LX1D6R7	**41.50**
480	—	LX1D6T6	—	**41.50**
500	LX1D6S5	—	—	**170.00**
575	—	LX1D6S6	—	**41.50**
600	—	LX1D6X6	—	**41.50**
660	LX1D6Y5	—	—	**41.50**

For old style and new TeSys style contactors where the catalog number may or may not include the auxiliary contact arrangement.

Specification	50 Hz	60 Hz	50/60 Hz
Average consumption: -inrush (inductance .75) -sealed (inductance .3)	200 VA 20 VA	220 VA 22 VA	245 VA at 50 or 60 Hz 26 VA at 50 or 60 Hz
Operating range at θ ≤ 55°C / 131°F	80–110% of nominal voltage	80–110% of nominal voltage	85–110% of nominal voltage

Table 18.58: For TeSys D LC1D40A, D50A, D65A, DT60A, DT80A

Rated Nominal Voltage V	Catalog Number 50 Hz	Catalog Number 60 Hz	Catalog Number 50/60 Hz	$ Price
12	LXD3J5	—	—	**41.50**
24	—	—	LXD3B7	**41.50**
32	—	—	LXD3C7	**41.50**
42	—	—	LXD3D7	**41.50**
48	—	—	LXD3E7	**41.50**
100	—	—	LXD3K7	**41.50**
110	—	—	LXD3F7	**41.50**
115	—	—	LXD3FE7	**41.50**
120	—	—	LXD3G7	**41.50**
127	—	—	LXD3FC7	**41.50**
200	—	—	LXD3L7	**41.50**
208	—	—	LXD3LE7	**41.50**
220	—	—	LXD3M7	**41.50**
230	—	—	LXD3P7	**41.50**
240	—	—	LXD3U7	**41.50**
277	—	—	LXD3W7	**41.50**
380	—	—	LXD3Q7	**41.50**
400	—	—	LXD3V7	**41.50**
415	—	—	LXD3N7	**41.50**
440	—	—	LXD3R7	**41.50**
480	—	—	LXD3T7	**41.50**
500	—	—	LXD3S7	**41.50**
575	—	—	LXD3SC7	**41.50**
600	—	—	LXD3X7	**41.50**
660	—	—	LXD3YC7	**41.50**
690	—	—	LXD3Y7	**41.50**

Specification	50 Hz	60 Hz	50/60 Hz
Average consumption: -inrush (inductance .3) -sealed (inductance .3)	160 VA 7.0 VA	140 VA 7.5 VA	140 Va (Inductance: .9) 7.5 Va (Inductance: .9)
Operating range at θ ≤ 55°C / 131°F	85–110% of nominal voltage	85–110% of nominal voltage	80–115% of nominal voltage

Table 18.59: For TeSys D LC1D115, D150

Rated Nominal Voltage V	Catalog Number 50 Hz	Catalog Number 60 Hz	Catalog Number 50/60 Hz	$ Price
24	LX1D8B5	LX1D8B6	LX1D8B7	**78.00**
32	LX1D8C5	—	LX1D8C7	**78.00**
42	LX1D8D5	—	LX1D8D7	**78.00**
48	LX1D8E5	LX1D8E6	LX1D8E7	**78.00**
110	LX1D8F5	LX1D8F6	LX1D8F7	**78.00**
115	LX1D8FE5	—	LX1D8FE7	**78.00**
120	—	LX1D8G6	LX1D8G7	**78.00**
127	LX1D8FC5	—	LX1D8FC7	**78.00**
208	—	LX1D8L6	LX1D8L7	**78.00**
220/230	LX1D8M5	LX1D8M6	LX1D8M7	**78.00**
230	LX1D8P5	—	LX1D8P7	**78.00**
240	LX1D8U5	LX1D8U6	LX1D8U7	**78.00**
277	—	LX1D8W6	LX1D8W7	**78.00**
380/400	LX1D8Q5	LX1D8Q6	LX1D8Q7	**78.00**
400	LX1D8V5	—	LX1D8V7	**78.00**
415	LX1D8N5	—	LX1D8N7	**78.00**
440	LX1D8R5	LX1D8R6	LX1D8R7	**78.00**
480	—	LX1D8T6	LX1D8T7	**78.00**
500	LX1D8S5	—	LX1D8S6	**78.00**

For old style and new TeSys style contactors where the catalog number may or may not include the auxiliary contact arrangement.

Specification	50 Hz	60 Hz	50/60 Hz
Average consumption: -inrush (inductance .3) -sealed (inductance .3)	300 VA 22 VA	300 VA 22 VA	350 Va (Inductance: .9) 18 Va (Inductance: .9)
Operating range at θ ≤ 55°C / 131°F	85–110% of nominal voltage	85–110% of nominal voltage	80–115% of nominal voltage

Table 18.60: For LC1F115, F150, F185, F265, F330, F400, F500, F630, F780, F800 —

LX1 coils are the standard coils that are included when a voltage code is added to the contactor part number. The LX9 coils may be ordered separately for special applications. LX9 coils do not include a built-in normally open holding circuit contact; a separate auxiliary contact block with a N.O. contact should be added to the contactor. Both the LX1 and LX9 coils can be used on the previous F-line contactors.

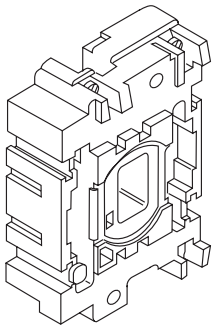

LX1D6

Device Type	Hz	Catalog Number	Catalog Number Suffix□ 24 V	48 V	110 V	120 V	208 V	220 V	240 V	277 V	380 V	415 V	440 V	480 V	600 V	$ Price
F115–F150	50	LX1FF•	024	048	110	127	200	220	240	264	380	415	415	500	600	**78.00**
	60	LX1FF•	020	040	092	095	162	184	187	220	316	340	360	380	475	**78.00**
	40–400	LX9FF•	—	048	110	127	200	220	220	260	380	415	415	500	—	**78.00**
F185 F225	50	LX1FG•	024	048	110	127	200	220	240	264	380	415	415	450	600	**108.00**
	60	LX1FG•	020	040	092	095	162	184	187	220	316	340	360	380	475	**108.00**
	40–400	LX9FG•	—	048	110	127	200	220	220	260	380	415	415	500	—	**108.00**
F265–F330	40–400	LX1FH•	0242	0482	1102	1272	2002	2202	2402	2772	3802	3802	4402	5002	6002	**138.00**
	40–400	LX9FH•	—	0482	1102	1272	2002	2202	2402	2772	3802	3802	. . .	5002	—	**138.00**
F400★	40–400	LX1FJ•	—	048	110	110	200	220	240	280	380	415	415	415	600	**287.00**
	40–400	LX9FJ• △	910	917	925	925	930	931	932	932	936	936	937	937	—	**287.00**
F500★	40–400	LX1FK•	—	048	110	110	200	220	240	280	380	415	415	415	600	**360.00**
	40–400	LX9FK• △	910	917	925	925	930	931	932	932	936	936	937	937	—	**360.00**
F630★	40–400	LX1FL•	—	048	110	110	200	220	240	260	380	415	415	415	600	**398.00**
	40–400	LX9FL• △	910	917	924	925	930	930	931	932	935	936	936	937	—	**483.00**
F780, FX ♦	40–400	LX1FX•	—	—	110	110	200	220	220	280	380	415	415	415	—	**795.00**
F800	50/60	LX4F8• ▼	—	—	FW	FW	—	MW	MW	—	QW	QW	QW	—	—	**725.00**

♦ LC1F780 contactors operate on 2 coils as a set. The LX1FX part number includes both coils.

★ The 600 V coils for the F400, F500 and F630 do not include an auxiliary contact for holding circuits. If required, select appropriate contacts from page 18-8.

▼ Also requires rectifier DR5TE4U for 110 V–240 V coils, DR5TE4S for 380 V–440 V coils. See table below for pricing.

△ Coil circuit requires a separately mounted rectifier. Order from Rectifier Table.

□ Complete catalog number by adding suffix. For example: LX1FF024.

Table 18.61: Rectifier Table

Coil	Rectifier Catalog Number	$ Price
LX9F•910	DR5TF4V	**75.00**
LX9F•917	DR5TF4V	**75.00**
LX9F•925	DR5TE4U	**75.00**
LX9F•926	DR5TE4U	**75.00**
LX9F•931	DR5TE4U	**75.00**
LX9F•936	DR5TE4S	**75.00**
LX9F•937	DR5TE4S	**75.00**
LX9F•938	DR5TE4S	**75.00**

Application Note on Contactor Drop-out Times:

Contactors using LX1, FH, FJ, FK, FL, and FX coils have longer drop-out times. For critical applications such as emergency stop functions:

- Select a fast drop-out coil (LX9), or
- Use a maintained contact Stop button, or
- Use an interposing relay.

TeSys D contactors . . . . . pages 18-4, 18-6
TeSys F contactors. . . . . pages 18-5, 18-7
TeSys D overload relay accessories . . . . . .page 18-16
TeSys D replacement coils. . . . . .pages 18-17 to 18-19
Dimensions. . . . . .pages 18-40 to 18-47

© 2009 Schneider Electric
All Rights Reserved

Table 18.62: For old D2 LP1D09, D12, D18 Contactors ▲♦

Rated Nominal Voltage V	Catalog Number	Catalog Number Wide range	$ Price
12	LX4D2JD	LX4D2JW	**79.00**
21■	LX4D2ZD	—	**79.00**
24	LX4D2BD	LX4D2BW	**79.00**
36	LX4D2CD	LX4D2CW	**79.00**
48	LX4D2ED	LX4D2EW	**79.00**
60	LX4D2ND	—	**79.00**
72	LX4D2SD	LX4D2SW	**79.00**
110	LX4D2FD	LX4D2FW	**79.00**
125	LX4D2GD	—	**79.00**
220	LX4D2MD	LX4D2MW	**79.00**
250	LX4D2UD	—	**79.00**
440	LX4D2RD	—	**79.00**
600	LX4D2XD	—	**79.00**

Specifications		
Average consumption	**9 W**	**11 W**
Operating range at θ–55°C / 131°F	80–110% of nominal voltage	70–125% of nominal voltage

Table 18.63: For old D2 LP1D25, D32 ▲♦

Rated Nominal Voltage V	Catalog Number	Catalog Number Wide range	$ Price
12	LX4D4JD	LX4D4JW	**110.00**
21 ■	LX4D4ZD	—	**110.00**
24	LX4D4BD	LX4D4BW	**110.00**
36	LX4D4CD	LX4D4CW	**110.00**
48	LX4D4ED	LX4D4EW	**110.00**
60	LX4D4ND	—	**110.00**
72	LX4D4SD	LX4D4SW	**110.00**
110	LX4D4FD	LX4D4FW	**110.00**
125	LX4D4GD	—	**110.00**
220	LX4D4MD	LX4D4MW	**110.00**
250	LX4D4UD	—	**110.00**
440	LX4D4RD	—	**110.00**
600	LX4D4XD	—	**110.00**

Specifications		
Average consumption	**11 W**	**13 W**
Operating range at θ ≤ 55°C / 131°F	80–110% of nominal voltage	70–125% of nominal voltage

▲ For old style contactors where the catalog number includes the auxiliary contact arrangement (ex. LP1D2510). The new style TeSys DC controlled contactors (ex. LC1D25BD) do not have replaceable coils.

■ For use in 24 volt applications with serial timer modules. Refer to page 18-10.

♦ No replacement DC coils for TeSys D contactors.

Note: DC coils for LC1D09-D32, LC1DT20 - LC1DT40, and LCID●●A contactors are not replaceable.

Specifications		
	Average consumption	**Operating range**
LC1D09-D32, LC1DT20 - LC1DT40	Inrush 5.4 w	70 - 125% @ 60°C
	Sealed 5.4 w	
LCID●●A	Inrush 19 w	75 - 125% @ 60°C
	Sealed 7.4 w	
	Low consumption	
LC1D09-D32, LC1DT20 - LC1DT40	Inrush 2.4 w	70 - 125% @ 60°C
	Sealed 2.4 w	

Table 18.64: For old D2 LP1D40, D50, D65 ▲♦

Rated Nominal Voltage V	Catalog Number	Catalog Number Wide range	$ Price
12	LX4D6JD	LX4D6JW	**124.00**
24	LX4D6BD	LX4D6BW	
36	LX4D6CD	LX4D6CW	
48	LX4D6ED	LX4D6EW	
60	LX4D6ND	—	
72	LX4D6SD	LX4D6SW	**124.00**
110	LX4D6FD	LX4D6FW	
125	LX4D6GD	—	
220	LX4D6MD	LX4D6MW	
250	LX4D6UD	—	**124.00**
440	LX4D6RD	—	
600	LX4D6XD	—	

Specifications		
Average consumption	**22 W**	**23 W**
Operating range at θ ≤ 55°C /131°F	80–110% of nominal voltage	75–120% of nominal voltage

Table 18.65: For old D2 LP1D80 and LC1D80▲

Rated Nominal Voltage V	Catalog Number	Catalog Number Wide Range ★	$ Price
12	LX4D7JD	LX4D7JW	**134.00**
24	LX4D7BD	LX4D7BW	
36	LX4D7CD	LX4D7CW	
48	LX4D7ED	LX4D7EW	
60	LX4D7ND	—	
72	LX4D7SD	LX4D7SW	**134.00**
110	LX4D7FD	LX4D7FW	
125	LX4D7GD	—	
220	LX4D7MD	LX4D7MW	
250	LX4D7UD	—	
440	LX4D7RD	—	**134.00**
600	LX4D7XD	—	

Specifications		
Average consumption	**22 W**	**23 W**
Operating range at θ ≤ 55°C / 131°F	80–110% nominal voltage	70–120% nominal voltage

★ Wide range coils cannot be used with contactors utilizing both front and side mount auxiliaries.

Table 18.66: For TeSys D LC1D115, 150

Rated Nominal Voltage V	Catalog Number	$ Price
24	LX4D8BD	**78.00**
48	LX4D8ED	
60	LX4D8ND	
72	LX4D8SD	
110	LX4D8FD	
125	LX4D8GD	**78.00**
220	LX4D8MD	
250	LX4D8UD	
440	LX4D8RD	

Average consumption	Inrush 365 W, Sealed 5 W
Operating range at θ ≤ 55°C / 131°F	70%–120% of nominal voltage

TeSys D contactors . . . . . pages 18-4, 18-6
TeSys D overload relay accessories. . . . . .page 18-16
TeSys D replacement coils . . . . . pages 18-17 to 18-19
Dimensions . . . . . pages 18-40 to 18-46

Limited Stock
Will be replaced with TeSys
Limited Stock
Will be replaced with TeSys

© 2009 Schneider Electric
All Rights Reserved

TeSys F DC Coils

LX4 coils are the standard coils when a voltage code is added to the part number. The LX9 coils may be ordered separately for special applications. LX9 coils do not include a built-in normally open holding circuit contact; a separate auxiliary contact block with a N.O. contact should be added to the contactor. Both the LX4 and LX9 coils can be used on previous F-line devices.

Table 18.67: LX4 coils for LC1F115, F150, F185, F265, F400, F500, F630, F780, F800

Device Type	Catalog Number	• Catalog Number Suffix										
		24 V	36V	48 V	60 V	72 V	110 V	125 V	220 V	250 V	440 V	$ Price
F115, F150	LX4FF •	024	035	048	060	070	110	125	220	250	440	**78.00**
F185, F225	LX4FG •	024	035	048	060	070	110	125	220	250	440	**108.00**
F265, F330	LX4FH •	024	035	048	060	070	110	125	220	250	440	**138.00**
F400	LX4FJ •	—	—	048	060	070	110	125	220	250	440	**287.00**
	LX9FJ • ♦	—	—	918	—	—	926	927	932	—	938	**287.00**
F500	LX4FK •	—	—	048	060	070	110	125	220	250	440	**360.00**
	LX9FK • ♦	—	—	918	—	—	926	927	932	—	938	**360.00**
F630	LX4FL •	—	—	048	060	070	110	125	220	250	440	**398.00**
	LX9FK • ♦	—	—	918	—	—	926	927	932	—	938	**398.00**
F780	LX4FX • ▲	—	—	—	—	—	110	125	220	250	440	**795.00**
F800	LX4F8 • ■	—	—	—	—	—	FW	FW	MW	—	QW	**725.00**

▲ LC1F780 contactors operate on 2 coils as a set. The LX4FX part number includes both coils.
■ Also requires rectifier DR5TE4U, **$72.00** list price.
♦ Coil Circuit requires a separately mounted resistor. Order from Table 18.68 below.

Table 18.68:

Coil	Resistor Catalog Number	Qty. Required	$ Price	Coil	Resistor Catalog Number	Qty. Required	$ Price	Coil	Resistor Catalog Number	Qty. Required	$ Price
LX9FJ918	DR2SC0047	1	**13.70**	LX9FK918	DR2SC0039	1	**13.70**	LX9FL918	DR2SC0047	2	**13.70**
LX9FJ926	DR2SC0030	1	**13.80**	LX9FK926	DR2SC0220	1	**13.70**	LX9FL925	DR2SC0270	2	**13.70**
LX9FJ927	DR2SC0390	1	**13.70**	LX9FK927	DR2SC0330	1	**13.70**	LX9FL926	DR2SC0330	2	**13.70**
LX9FJ932	DR2SC1200	1	**13.70**	LX9FK932	DR2SC1000	1	**13.70**	LX9FL931	DR2SC1000	2	**13.70**
LX9FJ938	DR2SC4700	1	**13.70**	LX9FK938	DR2SC3300	1	**13.70**	LX9FL937	DR2SC3900	2	**13.70**

TeSys F contactors . . . . . .pages 18-5, 18-7
TeSys F overload relay accessories . . . . . page 18-16
TeSys F replacement coils and parts . . . . . .pages 18-18, 18-18, 18-20
Dimensions. . . . . pages 18-42 to 18-47

© 2009 Schneider Electric
All Rights Reserved

TeSys D enclosed full voltage starters are available in Type 1 and Type 12/3R enclosures through 50 hp at 460 V. The enclosed D-line accepts standard D-Line accessories and all Insta-Kits™ control units and control power transformer kits. Standard capacity control power transformers with built-in fuse block can be installed in the standard enclosure. For extra capacity, please refer to your local distributor or nearest Square D/Schneider Electric sales office.

Table 18.69: Enclosed Full Voltage Non-reversing Starters

Max. Horsepower Ratings (AC3)						Auxiliary Contacts		Current Rating of Contactor	Catalog Number	$ Price	Catalog Number	$ Price
1 Phase		3 Phase										
115	230	200 V	230 V	460 V	575V	N.O.	N.C.		Type 1		Type 12/3R	
0.333	1	2	2	5	7.5	1	1	9	LE1D093A62•••••	**109.**	LE1D093A72•••••	**175.**
0.5	2	3	3	7.5	10	1	1	12	LE1D123A62•••••	**137.**	LE1D123A72•••••	**202.**
1	3	5	5	10	15	1	1	18	LE1D183A62•••••	**153.**	LE1D183A72•••••	**219.**
2	3	5	7.5	15	20	1	1	25	LE1D253A62•••••	**170.**	LE1D253A72•••••	**235.**
2	5	7.5	10	20	25	1	1	32	LE1D323A62•••••	**191.**	LE1D323A72•••••	**245.**
3	5	10	10	30	30	1	1	40	LE1D403A62•••••	**273.**	LE1D403A72•••••	**393.**
3	7.5	12	15	40	40	1	1	50	LE1D503A62•••••	**300.**	LE1D503A72•••••	**420.**
5	10	20	20	40	50	1	1	65	LE1D653A62•••••	**393.**	LE1D653A72•••••	**514.**
7.5	15	30	30	60	60	1	1	80	LE1D803A62•••••	**473.**	LE1D803A72•••••	**610.**

Table 18.70: Enclosed Full Voltage Reversing Starters

Max. Horsepower Ratings (AC3) 3 Phase				Auxiliary Contacts On Each Contactor		Current Rating of Contactor	Catalog Number	$ Price	Catalog Number	$ Price
200V	230 V	460 V	575 V	N.O.	N.C.		Type 1		Type 12/3R	
2	2	5	7.5	1	1	9	LE2D093A62•••••	**305.**	LE2D093A72•••••	**382.**
3	3	7.5	10	1	1	12	LE2D123A62•••••	**355.**	LE2D123A72•••••	**453.**
5	5	10	15	1	1	18	LE2D183A62•••••	**385.**	LE2D183A72•••••	**483.**
5	7.5	15	20	1	1	25	LE2D253A62•••••	**415.**	LE2D253A72•••••	**513.**
7.5	10	20	25	1	1	32	LE2D323A62•••••	**464.**	LE2D323A72•••••	**573.**
10	10	30	30	1	1	40	LE2D403A62•••••	**655.**	LE2D403A72•••••	**819.**
12	15	40	40	1	1	50	LE2D503A62•••••	**710.**	LE2D503A72•••••	**874.**
20	20	40	50	1	1	65	LE2D653A62•••••	**900.**	LE2D653A72•••••	**1030.**
30	30	60	60	1	1	80	LE2D803A62•••••	**1248.**	LE2D803A72•••••	**1412.**

Table 18.71: Catalog Number Nomenclature

Catalog Number Example: LE1D093A62 O G 7 1 07

- Base Catalog Number
- Control Power Transformer △
- Contactor/Starter Coil Voltage □
- Coil Frequency ◊
- Overload Relay Type ▽
- Overload Relay Range ☆

△Control Power Transformer

Add price from page 18-23. Select letter for primary voltage of CPT:

Voltage	No Transformer used	208	240	480	600
Code	O ▲	L	M	T	X

▲ Letter O, not zero.

Note: If control transformer is used, the only options available are 24 or 120 volts as the secondary of the transformer. Also, DC voltages are not available when control power transformer is used.

□Contactor/Starter Coil Voltage

Select coil voltage from table:

Voltage	24	120	208	240	480	600
AC	B	G	L	U	T	X
DC	B	—	—	—	—	—

◊Coil Frequency

Select:
7 = dual frequency coils (50/60 Hz.)
6 = 60 Hz.
D=DC

Note: For 9 to 65 A contactors, only dual frequency coils are available; 80 A contactors, the 24 V to 240 V coils are dual frequency only (50/60 Hz.). The 480 V to 600 V coils are 60 Hz. only. See catalog for other restrictions.

▽Overload relay type

Select:
0 = No overload relay
1 = Class 10 Trip
2 = Class 20 Trip

☆Overload Relay Range

Select code from the below:

Code	Range	For use on Contactors	$ Price Adder
01	0.1–0.16	D09–D32■	**60.**
02	0.16–0.25	D09–D32■	**60.**
03	0.25–0.40	D09–D32■	**60.**
04	0.40–0.63	D09–D32■	**60.**
05	0.63–1.0	D09–D32■	**60.**
06	1.0–1.6	D09–D32■	**60.**
07	1.6–2.5	D09–D32■	**60.**
08	2.5–4	D09–D32	**60.**
10	4–6	D09–D32	**60.**
12	5.5–8	D09–D32	**60.**
13	9–13	D40, D50, D65	**107.**
14	7–10	D09–D32	**62.**
16	9–13	D12–D32	**62.**
18	12–18	D40, D50, D65	**107.**
21	12–18	D18–D32	**62.**
22	16–24	D25–D32■	**62.**
	17–25	D25–D32♦	**62.**
	17–25	D80	**107.**
25	17–25	D40, D50, D65	**107.**
30	23-28	D25–D32♦	**73.**
32	23–32	D25–D32	**73.**
32	23–32	D40, D50, D65	**107.**
40	30–40	D40, D50, D65	**107.**
50	37–50	D40, D50, D65	**107.**
53	30–38	D80	**107.**
55	30–40	D80	**107.**
57	37–50	D80	**107.**
59	48–65	D80	**107.**
61	55–70	D65–D80	**107.**
63	63–80	D65–D80	**107.**
65	48–65	D40, D50, D65	**107.**

■ Available for Class 10 only.
♦ Available for Class 20 only.

Note: If no overload relay is required, leave this portion of the catalog blank. Add appropriate Price Adder to the base price of the starter.

Dimensions . . . . . .page 18-48

© 2009 Schneider Electric
All Rights Reserved

IEC combination starters combine the requirements of motor overload and short circuit protection in one convenient compact package. All devices provide Type 2 Coordination through 30 hp at 460 V. Devices are available in Type 1 and Type 12/3R enclosures. The IEC combination starter line accepts standard TeSys D accessories and all Insta-Kits™ pilot devices and control power transformer kits. Standard capacity control power transformers with built-in fuse block can be installed in the standard enclosure. For extra capacity, please refer to your local distributor or nearest Square D/Schneider Electric sales office.

NOTE: *Use tables and notes from page 18-21 to complete the catalog numbers.*

Table 18.72: Enclosed full voltage non-reversing fusible combination starters

Max. Horsepower Ratings (AC3) 3 Phase				Fuse Clip Rating		Auxiliary Contacts		Current Rating of Contactor	Catalog Number	$ Price	Catalog Number	$ Price
200 V	230 V	460 V	575 V	Amperes	UL Class	N.O.	N.C.		Type 1		Type 12/3R	
2	2	5	7.5	30 A	CC	1	1	9	LE1D096B62•••••	**426.**	LE1D096B72•••••	**551.**
3	3	7.5	10	30 A	CC	1	1	12	LE1D126B62•••••	**468.**	LE1D126B72•••••	**592.**
5	5	10	15	30 A	J	1	1	18	LE1D186B62•••••	**484.**	LE1D186B72•••••	**607.**
5	7.5	15	20	30 A	J	1	1	25	LE1D256B62•••••	**500.**	LE1D256B72•••••	**623.**
7.5	10	20	25	60 A	J	1	1	32	LE1D326C62•••••	**653.**	LE1D326C72•••••	**829.**
10	10	30	30	60 A	J	1	1	40	LE1D406C62•••••	**708.**	LE1D406C72•••••	**877.**

Table 18.73: Enclosed full voltage reversing fusible combination starters

Max. Horsepower Ratings (AC3) 3 Phase				Fuse Clip Rating		Aux. Contacts Each Contactor		Current Rating of Contactor	Catalog Number	$ Price	Catalog Number	$ Price
200 V	230 V	460 V	575 V	Amperes	UL Class	N.O.	N.C.		Type 1		Type 12/3R	
2	2	5	7.5	30 A	CC	1	1	9	LE2D096B62•••••	**712.**	LE2D096B72•••••	**837.**
3	3	7.5	10	30 A	CC	1	1	12	LE2D126B62•••••	**778.**	LE2D126B72•••••	**915.**
5	5	10	15	30 A	J	1	1	18	LE2D186B62•••••	**808.**	LE2D186B72•••••	**950.**
5	7.5	15	20	30 A	J	1	1	25	LE2D256B62•••••	**833.**	LE2D256B72•••••	**980.**
7.5	10	20	25	60 A	J	1	1	32	LE2D326C62•••••	**1089.**	LE2D326C72•••••	**1281.**
10	10	30	30	60 A	J	1	1	40	LE2D406C62•••••	**1179.**	LE2D406C72•••••	**1371.**

Table 18.74: Enclosed full voltage non-reversing circuit breaker combination starters

Max. Horsepower Ratings (AC3) 3 Phase				Auxiliary Contacts		Circuit Breaker Maximum Current Rating	Current Rating of Contactor	Catalog Number	$ Price	Catalog Number	$ Price
200 V	230 V	460 V	575 V	N.O.	N.C.			Type 1		Type 12/3R	
2	2	5	7.5	1	1	15 A	9	LE1D097D62•••••	**569.**	LE1D097D72•••••	**730.**
3	3	7.5	10	1	1	15 A	12	LE1D127D62•••••	**622.**	LE1D127D72•••••	**789.**
5	5	10	15	1	1	30 A	18	LE1D187E62•••••	**647.**	LE1D187E72•••••	**808.**
5	7.5	15	20	1	1	30 A	25	LE1D257E62•••••	**668.**	LE1D257E72•••••	**834.**
7.5	10	20	25	1	1	50 A	32	LE1D327F62•••••	**870.**	LE1D327F72•••••	**1088.**
10	10	30	30	1	1	50 A	40	LE1D407F62•••••	**944.**	LE1D407F72•••••	**1179.**

Table 18.75: Enclosed full voltage reversing circuit breaker combination starters

Max. Horsepower Ratings (AC3) 3 Phase				Auxiliary Contacts Each Contactor		Circuit Breaker Maximum Current Rating	Current Rating of Contactor	Catalog Number	$ Price	Catalog Number	$ Price
200 V	230 V	460 V	575 V	N.O.	N.C.			Type 1		Type 12/3R	
2	2	5	7.5	1	1	15 A	9	LE2D097D62•••••	**836.**	LE2D097D72•••••	**972.**
3	3	7.5	10	1	1	15 A	12	LE2D127D62•••••	**944.**	LE2D127D72•••••	**1096.**
5	5	10	15	1	1	30 A	18	LE2D187E62•••••	**1010.**	LE2D187E72•••••	**1174.**
5	7.5	15	20	1	1	30 A	25	LE2D257E62•••••	**1075.**	LE2D257E72•••••	**1251.**
7.5	10	20	25	1	1	50 A	32	LE2D327F62•••••	**1403.**	LE2D327F72•••••	**1631.**
10	10	30	30	1	1	50 A	40	LE2D407F62•••••	**1522.**	LE2D407F72•••••	**1770.**

Table 18.76: Enclosed full voltage non-reversing non-fused combination starters

Max. Horsepower Ratings (AC3) 3 Phase				Fuse Clip Rating		Auxiliary Contacts		Current Rating of Contactor	Catalog Number	$ Price	Catalog Number	$ Price
200 V	230 V	460 V	575 V	Amperes	UL Class	N.O.	N.C.		Type 1		Type 12/3R	
2	2	5	7.5	30 A	CC	1	1	9	LE1D096A62•••••	**416.**	LE1D096A72•••••	**541.**
3	3	7.5	10	30 A	CC	1	1	12	LE1D126A62•••••	**458.**	LE1D126A72•••••	**532.**
5	5	10	15	30 A	J	1	1	18	LE1D186A62•••••	**474.**	LE1D186A72•••••	**597.**
5	7.5	15	20	30 A	J	1	1	25	LE1D256A62•••••	**490.**	LE1D256A72•••••	**613.**
7.5	10	20	25	60 A	J	1	1	32	LE1D326A62•••••	**643.**	LE1D326A72•••••	**819.**
10	10	30	30	60 A	J	1	1	40	LE1D406A62•••••	**698.**	LE1D406A72•••••	**867.**

Table 18.77: Enclosed full voltage reversing non-fused combination starters

Max. Horsepower Ratings (AC3) 3 Phase				Fuse Clip Rating		Aux. Contacts Each Contactor		Current Rating of Contactor	Catalog Number	$ Price	Catalog Number	$ Price
200 V	230 V	460 V	575 V	Amperes	UL Class	N.O.	N.C.		Type 1		Type 12/3R	
2	2	5	7.5	30 A	CC	1	1	9	LE2D096A62•••••	**702.**	LE2D096A72•••••	**827.**
3	3	7.5	10	30 A	CC	1	1	12	LE2D126A62•••••	**768.**	LE2D126A72•••••	**905.**
5	5	10	15	30 A	J	1	1	18	LE2D186A62•••••	**798.**	LE2D186A72•••••	**940.**
5	7.5	15	20	30 A	J	1	1	25	LE2D256A62•••••	**823.**	LE2D256A72•••••	**970.**
7.5	10	20	25	60 A	J	1	1	32	LE2D326A62•••••	**1079.**	LE2D326A72•••••	**1271.**
10	10	30	30	60 A	J	1	1	40	LE2D406A62•••••	**1169.**	LE2D406A72•••••	**1361.**

Dimensions. . . . . page 18-48

© 2009 Schneider Electric
All Rights Reserved

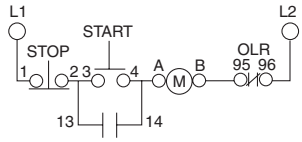

Start/Stop

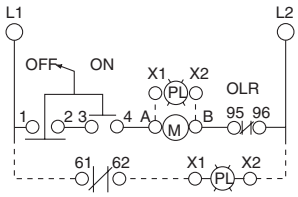

On-Off Selector Switch

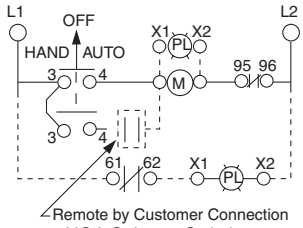

HOA Selector Switch

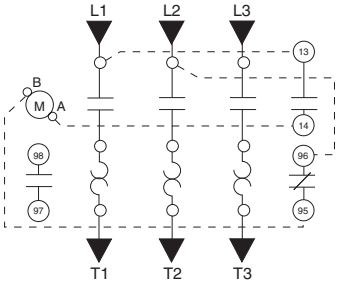

D-Line AC Magnetic Starter
2-3 Poll

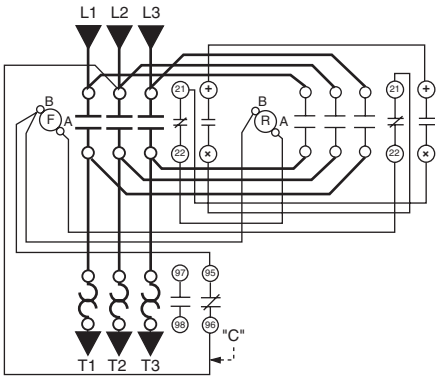

D-Line AC Magnetic Reversing Starter
3-Pole

Factory Modifications and INSTA-KITS™ selection

Add the Factory Modification Code to the end of the catalog number created from page 18-21. With the use of INSTA-KITS™, only one operator scheme is allowed. Only the combinations of operators and pilot lights shown below can be ordered.

Pilot lights will be at the coil voltage indicated in the catalog number for the starter.

Table 18.78:

Description	Factory Modification Code▲	$ Price	Insta-Kits (for field installation)	$ Price
Control Units Only				
For-rev-stop Push Button	A06L	**131.**	LA9CA06LT	**71.00**
Start/Stop Push Button	A06G	**65.**	LA9CA06GT	**32.80**
I/O (Start/Stop) Push Button	N/A	—	N/A	—
I/O Push Button (double touch)	A06I	**83.**	LA9CA06IO	**41.50**
Emergency Stop	N/A	—	N/A	—
Hand-Off-Auto Selector Switch	A06E	**65.**	LA9CA06ET	**32.80**
On/off Selector Switch	A06D	**65.**	LA9CA06DT	**41.50**
Start/Mushroom Head Stop Push Button	A06X	**65.**	LA9CA06XT	**63.00**
Pilot Lights only				
LED Pilot light, 24, 120 or 240 V	A16S	**134.**	LA9CA16ST★	**66.00**
Green-Red Pilot light, Direct supply, 24 or 120 V ■	A06S	**112.**	LA9CA06ST★	**62.00**
Green-Red Transformer Pilot Light, 120, 208/240, 480 or 600 V ■	A06F	**207.**	LA9CA06FT★	**113.00**
Available combination of control units and pilot lights				
Hand-Off-Auto Selector Switch w/24, 120 or 240 V LED Pilot Light	A16U	**213.**	LA9CA16UT★	**177.00**
Start/Stop Push Button w/ 24, 120 or 240 V LED Pilot Light	A16V	**213.**	LA9CA16VT★	**177.00**
On/off Selector w/ 24, 120 or 240 V LED Pilot Light	A16W	**213.**	LA9CA16WT★	**177.00**
Start/Stop Push Button w/ Green-Red Transformer Pilot Light	A06N	**177.**	LA9CA06NT★	**95.00**
Start/Stop Push Button w/Green-Red Pilot Light	A06V	**177.**	LA9CA06VT	**95.00**
Hand-Off-Auto Selector Switch w/Green-Red Pilot Light	A06U	**273.**	LA9CA06UT	**97.00**
Hand-Off-Auto Selector Switch w/Green-Red Transformer Pilot Light	A06J	**273.**	LA9CA06JT★	**147.00**
On/off Selector w/Green-Red Pilot Light	A06W	**177.**	LA9CA06WT	**95.00**
On/off Selector w/Green-Red Transformer Pilot Light	A06H	**273.**	LA9CA06HT★	**147.00**
Control Power Transformer				
Standard VA, 2 fuses in Primary, 1 Fuse in secondary	A206P	**260.**	♦	—
50 VA extra, 2 fuses in Primary, 1 Fuse in secondary	A207P	**456.**	♦	—
100 VA extra, 2 fuses in Primary, 1 Fuse in secondary	A208P	**634.**	♦	—

▲ Add these forms to the catalog number selected on page 18-21. The numbers as shown are for use in NEMA 1 Enclosures. For uses in NEMA 12/3R change the 6 to a 7 (ex A06U becomes A07U). Price remains the same. The change DOES NOT apply to control power transformer forms.

■ Pilot lights are wired such that the light is on when the contactor is energized. For non-LED type pilot lights, a green lens is installed on the unit when shipped. A red lens is included for use as applicable.

♦ Select Insta-Kits™ from table below.

Table 18.79:

Total VA	Insta-Kits™ Catalog Number	$ Price
50	LA9TFD32★	**140.00**
100	LA9TFD80★	**246.00**
150	LA9TFD15★	**343.00**

★ Complete the part number for the Insta-Kits™ by selecting the voltage code from the appropriate tables below.

Table 18.80: Voltage Codes for pilot lights

Voltage (Vac)	24	120	208/240	480	600
Code	B	G	M	T	X

Table 18.81: Voltage Codes for control power transformers

Primary Voltage	120	208	240	480	600	208	240	480	600
Secondary Voltage	24					120			
Code	E	D	C	B	A	L	M	T	X

© 2009 Schneider Electric
All Rights Reserved

3-Pole Non-Reversing Mini-Contactors

LC1K0610G7

Table 18.82: AC operating coils

Maximum Horsepower Ratings						Maximum Current		Type of Connection	Auxiliary Contacts		Catalog Number	$ Price
1 Ø		3 Ø				Inductive AC3 Amperes	Resistive AC1 Amperes		N.O.	N.C.		
115 V hp	230 V hp	200 V hp	230 V hp	460 V hp	575 V hp							
0.5	1.5	1.5	1.5	3	3	6	15	Screw-clamp	1	—	LC1K0610 ▲ ■	57.
									—	1	LC1K0601 ▲■	57.
0.5	1.5	2	3	5	5	9	20	Screw-clamp	1	—	LC1K0910 ▲■	75.
									—	1	LC1K0901 ▲■	75.
0.5	1.5	3	3	7.5	10	12	20	Screw-clamp	1	—	LC1K1210 ▲■	86.
									—	1	LC1K1201 ▲■	86.

LP1K0610

Table 18.83: Coil voltage codes for AC contactors

Up to and including 240 V coil with integral suppression device available. Add 2 to the code required. Example J72. Price adder $10.00.

Volts AC 50/60 Hz	12	24	42	48	110	120	127	200/208	220/230	230	230/240	277	380/400	400/415	440	480	660/690
Code	J7	B7	D7	E7	F7	G7	FC7	L7	M7	P7	U7	UE7	Q7	N7	R7	T7	Y7

Table 18.84: DC operating coils

0.5	1.5	1.5	1.5	3	3	6	15	Screw-clamp	1	—	LP1K0610 ▲■	75.
									—	1	LP1K0601 ▲■	75.
0.5	1.5	2	3	5	5	9	20	Screw-clamp	1	—	LP1K0910 ▲■	92.
									—	1	LP1K0901 ▲■	92.
0.5	1.5	3	3	7.5	10	12	20	Screw-clamp	1	—	LP1K1210 ▲■	106.
									—	1	LP1K1201 ▲■	106.

LP4K06105●

Table 18.85: Coil voltage codes for DC contactors

Coil with integral suppression device available. Add 3 to the code required. Example JD3. Price adder $10.00.

Volts DC	12	20	24	36	48	60	72	100	110	125	200	220	230	240	250
Code	JD	ZD	BD	CD	ED	ND	SD	KD	FD	GD	LD	MD	MPD	MUD	UD

Table 18.86: DC–Low consumption operating coils (devices have built-in transient suppression)

0.5	1.5	1.5	1.5	3	3	6	15	Screw-clamp	1	—	LP4K0610 ▲■	92.
									—	1	LP4K0601 ▲■	92.
0.5	1.5	2	3	5	5	9	20	Screw-clamp	1	—	LP4K0910 ▲■	110.
									—	1	LP4K0901 ▲■	110.
0.5	1.5	3	3	7.5	10	12	20	Screw-clamp	1	—	LP4K1210 ▲■	126.
									—	1	LP4K1201 ▲■	126.

Table 18.87: Coil voltage codes for DC contactors—Low consumption

Volts DC	12	24	48	72
Code	JW3	BW3	EW3	SW3

▲ For TeSys K contactors with spring terminal clamps, add a "3" before the coil voltage code (ex. LC1K06103G7).
For TeSys K contactors with solder pin terminals, add a "5" before the coil voltage code (ex. LC1K09105B7).
For TeSys K contactors with slip-on terminals, add a "7" before the coil voltage code (ex. LC1K12107M7).

■ Complete the catalog number with the appropriate coil voltage code. For example: LC1K0610G7.

LR2K0316

Table 18.88: Overload relays for 3-Pole contactors with screw-clamp terminals

Class 10, Relay setting range–A	Catalog Number	$ Price
0.1 to 0.16	LR2K0301	59.
0.16 to 0.23	LR2K0302	59.
0.23 to 0.36	LR2K0303	59.
0.36 to 0.54	LR2K0304	59.
0.54 to 0.8	LR2K0305	59.
0.8 to 1.2	LR2K0306	59.
1.2 to 1.8	LR2K0307	59.
1.8 to 2.6	LR2K0308	59.
2.6 to 3.7	LR2K0310	59.
3.8 to 5.5	LR2K0312	59.
5.5 to 8	LR2K0314	59.
8 to 11.5	LR2K0316	59.
10 to 14	LR2K0321	59.

LR2K overload relays:

- AC or DC protection
- Ambient compensated bimetallic
- Class 10
- Single phase sensitivity
- Manual or auto reset
- Full load current dial

E164862
CCN NLDX
(screw terminals)

LR43364
Class 3211 04

E164862
CCN NLDX2
(slip-on & solder-pin terminals)

Accessories . . . . . page 18-27
Dimensions. . . . . page 18-49

© 2009 Schneider Electric
All Rights Reserved

3-Pole Reversing Mini-Contactors

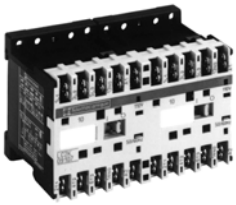
LC2K09107

Table 18.89: AC operating coils

Maximum Horsepower Ratings						Maximum Current		Type of Connection	Auxiliary Contacts		Catalog Number	$ Price
1Ø		3Ø				Inductive AC3 A	Resistive AC1 A		N.O.	N.C.		
115V hp	230V hp	200V hp	230V hp	460V hp	575V hp							
0.5	1.5	1.5	1.5	3	3	6	15	Screw-clamp	1 —	— 1	LC2K0610 ▲■ LC2K0601 ▲■	**130.** **130.**
0.5	1.5	2	3	5	5	9	20	Screw-clamp	1 —	— 1	LC2K0910 ▲■ LC2K0901 ▲■	**167.** **167.**
0.5	1.5	3	3	7.5	10	12	20	Screw-clamp	1 —	— 1	LC2K1210 ▲■ LC2K1201 ▲■	**191.** **191.**

Table 18.90: Coil voltage codes for AC contactors
Up to and including 240 V coil with integral suppression device available. Add 2 to the code required. Example J72. Price adder $20.00.

Volts AC 50/60 Hz	12	24	42	48	110	120	127	200/208	220/230	230	230/240	277	380/400	400/415	440	480	660/690
Code	J7	B7	D7	E7	F7	G7	FC7	L7	M7	P7	U7	UE7	Q7	N7	R7	T7	Y7

LP2K0910

Table 18.91: DC operating coils

0.5	1.5	1.5	1.5	3	3	6	15	Screw-clamp	1 —	— 1	LP2K0610 ▲■ LP2K0601 ▲■	**167.** **167.**
0.5	1.5	2	3	5	5	9	20	Screw-clamp	1 —	— 1	LP2K0910 ▲■ LP2K0901 ▲■	**202.** **202.**
0.5	1.5	3	3	7.5	10	12	20	Screw-clamp	1 —	— 1	LP2K1210 ▲■ LP2K1201 ▲■	**232.** **232.**

Table 18.92: Coil voltage codes for DC contactors
Coil with integral suppression device available. Add 3 to the code required. Example JD3. Price adder $20.00.

Volts DC	12	20	24	36	48	60	72	100	110	125	200	220	230	240	250
Code	JD	ZD	BD	CD	ED	ND	SD	KD	FD	GD	LD	MD	MPD	MUD	UD

LP2K09105

Table 18.93: DC–Low Consumption Operating Coils (devices have built-in transient suppression)

0.5	1.5	1.5	1.5	3	3	6	15	Screw-clamp	1 —	— 1	LP5K0610 ▲■ LP5K0601 ▲■	**202.** **202.**
0.5	1.5	2	3	5	5	9	20	Screw-clamp	1 —	— 1	LP5K0910 ▲■ LP5K0901 ▲■	**238.** **238.**
0.5	1.5	3	3	7.5	10	12	20	Screw-clamp	1 —	— 1	LP5K1210 ▲■ LP5K1201 ▲■	**274.** **274.**

Table 18.94: Coil voltage codes for DC contactors—Low consumption

Volts DC	12	24	48	72
Code	JW3	BW3	EW3	SW3

▲ For TeSys K contactors with spring terminal clamps, add a “3” before the coil voltage code (ex. LP2K09103BD).
For TeSys K contactors with solder pin terminals, add a “5” before the coil voltage code (ex. LP5K09105BW3).
For TeSys K contactors with slip-on terminals, add a “7” before the coil voltage code (ex. LC2K06107B7).

■ Complete the catalog number with the appropriate coil voltage code. For example: LC1K0610G7.

Overload Relays . . . . . page 18-24
Accessories . . . . . page 18-27
Dimensions . . . . . page 18-49

© 2009 Schneider Electric
All Rights Reserved

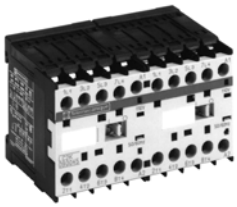

LC2K090045

Table 18.95: AC Operating Coils

Maximum Horsepower Ratings						Maximum Current		Type of Connection	Power Poles		Catalog Number	$ Price
1 PH		3 PH				Inductive AC3 A	Resistive AC1 A					
115 V hp	230 V hp	200 V hp	230 V hp	460 V hp	575 V hp				N.O.	N.C.		
4-Pole Mini Contactor												
0.5	1.5	2	3	5	5	9	15	Screw-clamp	4 2	— 2	LC1K09004 ▲■ LC1K09008 ▲■	**75.** **81.**
0.5	1.5	3	3	7.5	10	12	20	Screw-clamp	4	—	LC1K12004 ▲■	**86.**
4-Pole Mechanically Interlocked Contactors												
0.5	1.5	2	3	5	5	9	20	Screw-clamp	4	—	LC2K09004 ▲■	**167.**
0.5	1.5	3	3	7.5	10	12	20	Screw-clamp	4	—	LC2K12004 ▲■	**191.**

Table 18.96: Coil voltage codes for AC contactors
Up to and including 240 V coil with integral suppression device available. Add 2 to the code required. Example J72. Price adder $10.00 ($20.00 for mechanically interlocked contactors)

Volts AC 50/60 Hz	12	24	42	48	110	120	127	200/208	220/230	230	230/ 240	277	380/400	400/415	440	480	660/690
Code	J7	B7	D7	E7	F7	G7	FC7	L7	M7	P7	U7	UE7	Q7	N7	R7	T7	Y7

Table 18.97: DC operating coils

4-Pole Mini Contactor													
0.5	1.5	2	3	5	5	9	15	Screw-clamp	4 2	— 2	LP1K09004 ▲■ LP1K09008 ▲■	**92.** **98.**
0.5	1.5	3	3	7.5	10	12	20	Screw-clamp	4	—	LP1K12004 ▲■	**106.**
4-Pole Mechanically Interlocked Contactors													
0.5	1.5	2	3	5	5	9	20	Screw-clamp	4	—	LP2K09004 ▲■	**202.**
0.5	1.5	3	3	7.5	10	12	20	Screw-clamp	4	—	LP2K12004 ▲■	**232.**

Table 18.98: Coil voltage codes for DC contactors
Coil with integral suppression device available. Add 3 to the code required. Example JD3. Price adder $10.00 ($20.00 for mechanically interlocked contactors)

Volts DC	12	20	24	36	48	60	72	100	110	125	200	220	230	240	250
Code	JD	ZD	BD	CD	ED	ND	SD	KD	FD	GD	LD	MD	MPD	MUD	UD

Table 18.99: DC–Low consumption operating coils (devices have built-in transient suppression)

4-Pole Mini Contactor													
0.5	1.5	2	3	5	5	9	15	Screw-clamp	4 2	— 2	LP4K09004 ▲■ LP4K09008 ▲■	**110.** **116.**
0.5	1.5	3	3	7.5	10	12	20	Screw-clamp	4	—	LP4K12004 ▲■	**126.**
4-Pole Mechanically Interlocked Contactors													
0.5	1.5	2	3	5	5	9	20	Screw-clamp	4	—	LP5K09004 ▲■	**238.**
0.5	1.5	3	3	7.5	10	12	20	Screw-clamp	4	—	LP5K12004 ▲■	**274.**

Table 18.100: Coil voltages for DC contactors—Low consumption

Volts DC	12	24	48	72
Code	JW3	BW3	EW3	SW3

▲ For TeSys K contactors with spring terminal clamps, add a “3” before the coil voltage code (ex. LC1K09103L7).
For TeSys K contactors with solder pin terminals, add a “5” before the coil voltage code (ex. LP4K06015JW3).
For TeSys K contactors with slip-on terminals, add a “7” before the coil voltage code (ex. LP2K090047BD).

■ Complete the catalog number with the appropriate coil voltage code. For example: LC1K0610G7.

Overload Relays . . . . . page 18-24
Accessories . . . . . page 18-27
Dimensions. . . . . page 18-49

© 2009 Schneider Electric
All Rights Reserved

LA1KN11

Table 18.101: Instantaneous auxiliary contact blocks

Clip-on front mounting, 1 block per contactor and 2 blocks per pair of mechanically interlocked contactors.

Type of connection	Auxiliary Contacts N.O.	Auxiliary Contacts N.C.	Catalog Number	$ Price
Screw clamp	2	—	LA1KN20	14.20
	—	2	LA1KN02	14.20
	1	1	LA1KN11	14.20
	4	—	LA1KN40 ▲	27.30
	3	1	LA1KN31 ▲	27.30
	2	2	LA1KN22 ▲	27.30
	1	3	LA1KN13 ▲	27.30
	—	4	LA1KN04 ▲	27.30
Slip-on 1 x .250" or 2 x .110"	2	—	LA1KN207	14.20
	—	2	LA1KN027	14.20
	1	1	LA1KN117	14.20
	4	—	LA1KN407 ▲	27.30
	3	1	LA1KN317 ▲	27.30
	2	2	LA1KN227 ▲	27.30
	1	3	LA1KN137▲	27.30
	—	4	LA1KN047 ▲	27.30

▲ Block of 4 contacts cannot be used with LP4K or LP5K contactors.

LA1KN22

Table 18.102: Electronic time delay auxiliary contact blocks

Clip-on front mounting, 1 block per contactor and 2 blocks per pair of mechanically interlocked contactors.

Voltage (V)	Type	Timing Range (S)	Contacts	Catalog Number	$ Price
24 to 48 Vac or Vdc	On-delay	1 to 30	SPDT	LA2KT2E	32.80
110 to 240 Vac	On-delay	1 to 30	SPDT	LA2KT2U	32.80

Note: Relay outputs, with single pole double throw, 240 Vac/dc, 2 A max.
Note: Maximum switching capacity 250 VA / 150 W
Note: Operating temperature: -10 to + 60°C (14 to 140°F)
Note: Reset time: 1.5 s during time delay, 0.5 after time delay

LA2KT2U

Table 18.103: Suppressor Module with incorporated LED indicator

Clip-on front mounting

Voltage range	Type	Sold in lots of	Catalog Number	$ Price each
12 to 24 Vac and dc	Varistor	5	LA4KE1B ■	9.80
32 to 48 Vac and dc	Varistor	5	LA4KE1E ■	9.80
50 to 129 Vac and dc	Varistor	5	LA4KE1FC ■	9.80
130 to 250 Vac and dc	Varistor	5	LA4KE1UG ■	9.80
12 to 24 Vdc	Diode + Zener	5	LA4KC1B ♦	9.80
32 to 48 Vdc	Diode + Zener	5	LA4KC1E ♦	9.80
220 to 250 Vac	RC	5	LA4KA1U ★	9.80

■ Protection by limitation of the transient voltage to 2 Uc maximum. Maximum reduction of the transient voltage peaks. Slight time delay on drop-out (1.1 to 1.5 times normal).
♦ No overvoltage or oscillation frequency. Polarized component. Slight time delay on drop-out (1.1 to 1.5 times normal).
★ Protection by limitation of the transient voltage to 3 Uc maximum and limitation of the oscillation frequency. Slight time delay on drop-out (1.2 times normal).

Table 18.104: Paralleling Links

Description	Sold in lots of	Catalog Number	$ Price each
For 2 poles with screw-clamp terminals	4	LA9E01	2.20
For 4 poles with screw-clamp terminals	2	LA9E02	3.50

Table 18.105: Power Connectors

Description	Sold in lots of	Catalog Number	$ Price each
Set of 6 power connections for reversing contactors with screw-clamp terminals	100	LA9K0969	6.20
Set of 4 power connections for changeover contactors with screw-clamp terminals	100	LA9K0970	6.20

Table 18.106: Marking strips

Description	Sold in lots of	Catalog Number	$ Price each
Clips onto front of the contactor	100	LA9D90	.06

Table 18.107: Accessories for overload relays

Description	Type of Connection	Catalog Number	$ Price
Terminal block for separate clip-on mounting of the overload relay onto 35 mm omega rail (AM1DP200)	Screw-clamp	LA7K0064	11.90

E164862
CCN NLDX

LR43364
Class 3211 04

© 2009 Schneider Electric
All Rights Reserved

TeSys® U Simple Motor Starter

Refer to Catalog **8502CT0201**

Schneider Electric
www.schneider-electric.us

The TeSys U motor starter is integrated, simple to choose and to install, consisting of a control unit snapped in a power base. TeSys U can be configured to fit specific applications as well. Optional accessories: reverser, current limiter, predictive maintenance options and communication options.

To get details information about TeSys U, visit our web at www.us.schneider-electric.com/TeSysU.

1 Power Base

2 Control Unit

3 Function Modules
Auxiliary Contacts

\+ = TeSys® U Motor Starter

Selecting TeSys U Motor Starters in Three Steps

Power Base

Table 18.108: Step 1. Select Power Base (Only two different bases up to 32 amps.)

Control Connection	Max. Current (Amps)	Three Phase (HP max.)				Single Phase (HP max.)		Self-Protected Power Base	
		200/208 V	220/240 V	460 V	575/600 V	120 V	240 V	Catalog Number	$ Price
With screw terminations	12	3	3	7.5	10	1.5	2	LUB12	**246.00**
	32	10	10	20	25	2	5	LUB32	**345.00**

Table 18.109: Step 2. Select Control Unit □

Setting Range (Amps)	Standard 3-phase Class 10 trip ▼	$ Price	Advanced 3-phase Class 10 trip ▼	$ Price	Advanced single-phase Class 10 trip ▼	$ Price	Advanced 3-phase Class 20 trip ▼	$ Price
0.15–0.6	LUCAX6••	**120.00**	LUCBX6••	**150.00**	LUCCX6••	**150.00**	LUCDX6••	**150.00**
0.3–1.4	LUCA1X••	**120.00**	LUCB1X••	**150.00**	LUCC1X••	**150.00**	LUCD1X••	**150.00**
1.25–5.0	LUCA05••	**120.00**	LUCB05••	**150.00**	LUCC05••	**150.00**	LUCD05••	**150.00**
3–12	LUCA12••	**120.00**	LUCB12••	**150.00**	LUCC12••	**150.00**	LUCD12••	**150.00**
4.5–18 △	LUCA18••	**120.00**	LUCB18••	**150.00**	LUCC18••	**150.00**	LUCD18••	**150.00**
8–32 △	LUCA32••	**120.00**	LUCB32••	**150.00**	LUCC32••	**150.00**	LUCD32••	**150.00**

▼ Complete catalog number by adding appropriate code from voltage code table below. For example: LUCAX6FU.
△ Control units for 4.5–18 and 8–32 can be used ONLY with 32 amp rated power bases (LUB32 / LU2B32).
□ The control unit contains solid state overload relay and control power source for TeSys U. For more details on the different control units, their functions, and placement on the power base, see 18-29

Control Unit

Table 18.110: Voltage Codes

Volts	24	48–72	110–240
DC	BL◊	—	—
AC	B	—	—
DC or AC	—	ES☆	FU

◊ DC voltage with range of 0.90 to 1.10 of nominal.
☆ 48–72 Vdc; 48 Vac

Auxiliary Contact

Table 18.111: Step 3. Select Auxiliary Contacts (optional)

Terminals	Contact Indicates	Contact Normal Status	Contact State for Each Mode▲						Catalog Number	$ Price
			Off	Ready	Run	Short Circuit Trip	Overload Trip (Manual Reset)	Overload Trip (Remote/ Auto Reset)■		
Auxiliary Contact Blocks										
Screw	Ready condition	N.O.	O	I	I	O	O	I	LUA1C11	**34.5**
	Fault condition	N.C.	I	I	I	O	O	I		
Screw	Ready condition	N.O.	O	I	I	O	O	I	LUA1C20	
	Fault condition	N.O.	O	O	O	I	I	O		
Auxiliary Contact Function Modules										
Screw	Pole state	2 N.O.	O	O	I	O	O		LUFN20	**34.5**
Screw	Pole state	1 N.O. and 1 N.C.	O I	O I	I O	O I	O I		LUFN11	
Screw	Pole state	2 N.C.	1	I	O	I	I		LUFN02	

▲ I–indicates closed contact; O–indicates open contact
■ Requires multifunction or advanced control unit plus fault differentiation module LUFDA10.

Accessory	Quick Description	For details & selection, see pages:
Current Limiter	Increases the breaking capacity to 130kA @ 460 V	18-30
Reverser	Stacked or side mounted	18-30
Line phase barrier	Required for use as a self-protected combination starter (UL508E)	18-30
Multifunction Control Unit	Has functions for monitoring and predictive maintenance	18-30
Function modules	Fault differentiation, Thermal overload, Motor load indication	18-30
Communication modules	Integrates into existing networks, major portocols are available	18-31
Soft Starter + TeSys U	Use Altistart U01Soft Starter with TeSys U	18-32
Powerbus	Use TeSys U with a prewired system	18-31
Configuration and connection accessories	PowerSuite software, busbar, external handle	18-31

E164862
CCN NLDX

LR43364
Class 3211 08

Accessories . . . . . pages 18-29 to 18-31
Dimensions. . . . . page 18-50

I11 Discount Schedule

© 2009 Schneider Electric
All Rights Reserved

Table 18.112: Control Units and Functions

	Standard	Advanced			Multifunction
Reference	**LUCA**	**LUCB**	**LUCC**	**LUCD**	**LUCM**
Protection type					
Class 10					
Class 20					
Class 5…30					
Single Phase: LUCC Class 10 only					
Protection functions					
Short circuit					
Over current					
Thermal overload					
Phase loss					
Phase imbalance					
Ground fault					
Under load, long start, jam					
Control functions					
Manual reset					
Automatic or local/remote reset					
Fault differentiation					
Thermal alarm					
Motor load display					
Fault history					
Alarm Threshold adjustment					
Tripping test					

= built-in the control unit
= works with the related function modules (see Table 18.119 on page 30)

Power Base and plug-in accessories

Find below where to install the accessories to the power base. Only one accessory can be installed in each location.

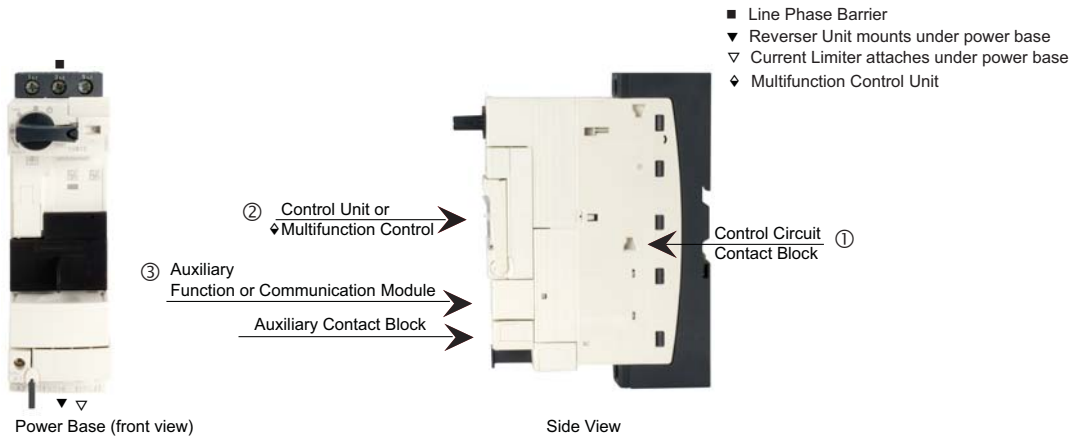

© 2009 Schneider Electric
All Rights Reserved

Line Phase Barrier

Reverser Unit assembled under the Power Base

Current Limiter and its Cartridge

Control Unit Multifunction

Alarm differentiation

Parallel wiring

Motor load indicator

Table 18.113: Line Phase Barrier (optional) ▲

Description	Catalog Number	$ Price
For use as a self protected combination starter, UL508E, incoming line phase barrier must be used.	LU9SP0	15.00

▲ See page 18-29 for placement on the power base.

Table 18.114: Reverser ■

Control Connection	Max. Current (Amps)	Three Phase (HP max.)				Self-Protected Starter Base	
		200/208 V	220/240 V	460 V	575 V	Catalog Number	$ Price
With screw terminations	12	3	3	7.5	10	LU2B12♦	488.00
	32	10	10	20	25	LU2B32♦	720.00

■ See page 18-29 for placement on the power base.
♦ Voltage code required.

Select Control Unit Options▼△

Setting Range (Amps)	Standard 3-phase Class 10 trip ★	$ Price	Advanced 3-phase Class 10 trip ★	$ Price	Advanced single-phase Class 10 trip ★	$ Price	Advanced 3-phase Class 20 trip ★	$ Price
0.15–0.6	LUCAX6••	120.00	LUCBX6••	150.00	LUCCX6••	150.00	LUCDX6••	150.00
0.3–1.4	LUCA1X••	120.00	LUCB1X••	150.00	LUCC1X••	150.00	LUCD1X••	150.00
1.25–5.0	LUCA05••	120.00	LUCB05••	150.00	LUCC05••	150.00	LUCD05••	150.00
3–12	LUCA12••	120.00	LUCB12••	150.00	LUCC12••	150.00	LUCD12••	150.00
4.5–18 ★	LUCA18••	120.00	LUCB18••	150.00	LUCC18••	150.00	LUCD18••	150.00
8–32 ★	LUCA32••	120.00	LUCB32••	150.00	LUCC32••	150.00	LUCD32••	150.00

★ Complete catalog number by adding appropriate code from voltage code table below. For example: LUCAX6FU.
▼ Control units for 4.5–18 and 8–32 can be used ONLY with 32 amp rated power bases (LUB32 / LU2B32).
△ The control unit contains solid state overload relay and control power source for TeSys U.
For more details on the different control units, their functions, and placement on the power base see page 18-29.

Table 18.115: Voltage Codes

Volts	24	48–72	110–240
DC	BL□■	—	—
AC	B	—	—
DC or AC	—	ES▽	FU

□ Voltage code to use for a power base with a communication module.
◊ DC voltage with range of 0.90 to 1.10 of nominal.
☆ 48–72 Vdc; 48 Vac

Table 18.116: Current Limiter ▽◒

Accessory	Application	Technical Data	Mounting	Catalog Number	$ Price
Current limiter/isolator	Additional current limiting aspects for the starter	130 kA at 460 V 60 kA at 575 V	Direct mounting to LUB• and LU2B•	LUALB1	171.00
Limiter cartridge	Replacement cartridge for LUALB1	130 kA at 460 V 65 kA at 575 V	—	LUALF1	78.00

▽ Increases the breaking capacity of the motor starter.
◒ See page 18-29 for placement on the power base.

Table 18.117: Control Unit Multifunction ✱⬨

Setting Range (Amps)	Multifunction programmable	$ Price
0.15–0.6	LUCMX6BL	615.00
0.3–1.4	LUCM1XBL	
1.25–5.0	LUCM05BL	
3–12	LUCM12BL	
4.5–18	LUCM18BL	
8–32	LUCM32BL	

✱ Offers motor management system capabilities. For more details see the LUCM on page 18-31.
⬨ See page 18-29 for placement on the power base.

Table 18.118: Function Modules ◑✪

Module	Description	For use with:	Operation Requirements	Catalog Number	$ Price
Fault differentiation with manual reset (thermal overload)	Provides indication between an overload trip and a short circuit trip.	Advanced control units only	24–250 Vac or Vdc (power from control unit)	LUFDH20	156.00
Fault differentiation with auto reset				LUFDA10	156.00
Thermal overload pre-alarm	Signals when the motor current reaches 1.05 of the full load setting on the control unit.	Advanced control units only	24–250 Vac or Vdc (power from control unit)	LUFW10	156.00
Motor load indication	Provides a signal proportional to the average currents in the three phases divided by the full load current setting of the control unit. The output corresponds to a load status of 0–2 times the full load setting of the control unit.	Advanced or multi-function control units	4–20 mA (requires separate 24 Vdc power supply)	LUFV2	188.00
Parallel wiring	Provides a convenient way to reduce control wiring and allow for connecting starters to a communications network by providing 24 Vdc for the starters.	Advanced or multi-function control units(24 Vdc only) and LU9BN11C or LU9MRC pre-wired connector	LU9G02 splitter box and PLC network	LUFC00	57.00

◑ Offers customization for specific application requirements.
✪ See page 18-29 for placement on the power base.

© 2009 Schneider Electric
All Rights Reserved

AS-Interface

Modbus

DeviceNet

Profibus

CANopen

Table 18.119: Communication Modules ★▼

Module	Description	For use with:	Operation Requirements	Catalog Number	$ Price
AS-Interface Communication	Allows the TeSys U starter to be connected directly to the network using AS-Interface protocols.	Advanced or multi-function control units (24 Vdc only) and LU9BN11C or LU9MRC pre-wired connector	Requires separate 24 Vdc power supply and AS-Interface network	ASILUFC5	188.00
AS-Interface V2 Communication	Allows the TeSys U starter to be connected directly to the network using AS-Interface V2 protocols.	Advanced or multi-function control units (24 Vdc only) and LU9BN11C or LU9MRC pre-wired connector	Requires separate 24 Vdc power supply and AS-Interface V2 network	ASILUFC51	188.00
Modbus® Communication Protocol	Allows the TeSys U starter to be connected directly to the network using Modbus protocols.	Advanced or multi-function control units (24 Vdc only) and LU9BN11C or LU9MRC pre-wired connector	Requires separate 24 Vdc power supply	LULC033	218.00
Advantys™ STB Communication	Allows the TeSys U starter to be connected to the network using the Advantsys STB protocol	Advanced or multi-function control units (24 Vdc only) and LU9BN11L or LU9MRL pre-wired connector	Requires separate 24 Vdc power supply	LULC15	218.00
CANopen Communication	Allows the TeSys U starter to be connected to the network using the Can Open protocol	Advanced or multi-function control units (24 Vdc only) and LU9BN11L or LU9MRL pre-wired connector	Requires separate 24 Vdc power supply	LULC08	218.00
Beckoff Communication	Allows the TeSys Ustarter to be connected to the network using the Beckoff protocol	Advanced or multi-function control units (24 Vdc only) and LU9BN11L or LU9MRL pre-wired connector	Requires separate 24 Vdc power supply	LULC14	218.00
Profibus Communication	Allows the TeSys Ustarter to be connected to the network using the Profibus protocol	Advanced or multi-function control units (24 Vdc only) and LU9BN11L or LU9MRL pre-wired connector	Requires separate 24 Vdc power supply	LULC07	218.00
DeviceNet® Communication	Allows the TeSys U starter to be connected to the network using the Device Net protocol	Advanced or multi-function control units (24 Vdc only) and LU9BN11L or LU9MRL pre-wired connector	Requires separate 24 Vdc power supply	LULC09	218.00

◪ Communication capabilities can be integrated into existing automation architecture via a variety of protocols.
◊ See 18-29 for placement on the power base.

Configuration and Connection Accessories

Table 18.120: Control Circuit Accessories △

Accessory	Application	Technical Data	Mounting		Catalog Number	$ Price
Control circuit contact block	Switches control circuit power via LUB• handle (NEC430-74 compliance)	5 amp at 600 Vac 5 amp at 250 Vdc	Side mounting to LUB• and LU2B• only		LUA8E20	71.00
Through-the-door operating mechanism	Use in enclosures 7.5 to 20 inches deep. Use with LUB• only.	—	—		LU9AP00	125.00
Operating handle (NEMA 12)	Use with LU9AP00	Black / Blue	Enclosure door		LU9AP11	31.50
		Red / Yellow	Enclosure door		LU9AP12	31.50
Control circuit filters	Use with electronic or triac output controllers	Up to 150 VAC max.	Directly to coil terminals	Non-reversing	LUA4F11	39.30
				Reversing	LUA4F12	39.30

‡ See page 29 for placement on the power base.

Table 18.121: PowerSuite Configuration Software and Accessories

Item▲	Catalog Number	$ Price■
PowerSuite software	VW3A8104	225.00
PC connection kit	VW3A8106	113.00
Pocket PC connection kit	VW3A8111	143.00

▲ For complete details on all components included with each item, refer to Catalog #**8502CT0201**.
■ Items under Discount Schedule CP4C.

Powerbus

Table 18.122: GV2 Cabling Accessories—Bus Bars

Description	Application	Pitch	Standard Pack	Catalog Number	$ Price Each
3-Pole, 63 A Bus Bar	For feeding 2 GV2 starters or TeSys U	45	1	GV2G245	23.30
		54	1	GV2G254	23.30
		72	1	GV2G272	23.30
	For feeding 3 GV2 starters or TeSys U	45	1	GV2G345	28.70
		54	1	GV2G354	28.70
	For feeding 4 GV2 starters or TeSys U	45	1	GV2G445	34.20
		54	1	GV2G454	34.20
		72	1	GV2G472	34.20
	For feeding 5 GV2 starters or TeSys U	54	1	GV2G554	34.20

Additional accessories and components are available, including:

- Mounting accessories
- Gateways
- Cabling accessories
- Magelis® remote display unit

For the complete line of TeSys U-Line motor starter accessories and all technical details (specifications, wiring diagrams, etc.) pertaining to the product line, refer to Catalog 8502CT0201.

© 2009 Schneider Electric
All Rights Reserved

Altistart Drive and TeSys U Motor Starter

ATSU01••

Table 18.123: Soft Start/Soft Stop Unit for 0.75 to 15 kW Motors (Can be combined with the TeSys U Starter)

Motor		Starter		
Motor Power (1)		Nominal Current	Part Number	$ Price
230 V	460 V			
HP	HP	A		
3-Phase supply voltage: 200 ... 480 V 50/60 Hz				
1	2	6	ATSU01N206LT	**133.00**
1.5	3			
2	5	9	ATSU01N209LT	**152.00**
3	7.5	12	ATSU01N212LT	**175.00**
5	10	22	ATSU01N222LT	**219.00**
7.5	15			
10	20	32	ATSU01N232LT	**300.00**

▲ Standard motor power ratings, HP power ratings indicated according to standard UL 508.

Table 18.124: Accessories

Description	Used for Starter	Reference	$ Price
Power connector between ATSU 01N2••LT and TeSys U	ATSU01N2••T	VW3G4104	**10.00**

Table 18.125: TeSys U Starter and Soft Start Unit Combinations

Motor Power		Soft Starter	TeSys U	
Voltage			Power Base	Control Unit ■
200 V	460 V			
HP	HP			
1	2	ATSU01N206LT	LUB 12	LUC•05BL
1.5	3	ATSU01N206LT		LUC•12BL
2	5	ATSU01N209LT		LUC•12BL
3	—	ATSU01N212LT		LUC•12BL
—	7.5	ATSU01N212LT		LUC •18BL
5	10	ATSU01N222LT		LUC•18BL
7.5	15	ATSU01N222LT	LUB 32	LUC•32BL
10	20	ATSU01N232LT		LUC•32BL

■ Depending on the configuration of the chosen TeSys U starter, replace the • with "A" for standard, "B" for advanced, and "M" for multifunction. See page 18-28 for a complete list of available control units. Control voltage must be 24 Vdc.

E231693
CCN NLDX

LR96921
Class 3211 06

© 2009 Schneider Electric
All Rights Reserved

GV2ME

The GV family of products are 3-pole, horsepower rated, UL 508 listed, manual starters. They include a manual disconnect, class 10 ambient-compensated thermal overload relay, and an instantaneous magnetic trip mechanism in one compact unit.

Any GV manual starter can be used alone for local manual control of a motor with individual full-load currents up to 220 amps. The GV family of products may also be used in group motor installations in accordance with National Electric Code article 430-53. Group motor installations give you greater panel density for smaller size and require fewer parts and less wiring necessary for installation when compared to conventional panel designs.

The GV2P and GV3P products also have an additional UL 508 type E rating as a stand alone self-protected manual combination starter. The UL 508 type E rating requires the addition of line side insulating barrier GV2GH7 for the GV2P or part number GV3G66 for the GV3P. The GV2P and the GV3P self-protected manual combination starter may also be combined with specific size contactors from the LC1D product family for a UL 508 Type F combination starter construction. These products have UL-listed short circuit current rating from 10–100 KA depending on application size and voltage. See www.us.telemecanique.com for more information.

How to Order

To order the basic motor starter, select the model number (GV2ME••, GV2P••, or GV3P••) with the appropriate thermal setting from the table below. The thermal trip range and setting should be determined from the motor nameplate full-load current.

GV2P21 with GV2GH7 installed

Table 18.126:

Thermal Setting (A)	Maximum Horsepower Ratings						Group Motor Applications	GV2/3M push button		GV2/3P rotary handle	
	1Ø		3Ø								
	115 V hp	230 V hp	200 V hp	230 V hp	460 V hp	575 V hp	Max. Fuse or Circuit Breaker	Catalog Number	$ Price	Catalog Number	$ Price
0.11–0.16	—	—	—	—	—	—	450 A	GV2ME01▲	159.	GV2P01	212.
0.16–0.25	—	—	—	—	—	—	450 A	GV2ME02▲	159.	GV2P02	212.
0.25–0.40	—	—	—	—	—	—	450 A	GV2ME03▲	159.	GV2P03	212.
0.40–0.63	—	—	—	—	—	—	450 A	GV2ME04▲	180.	GV2P04	233.
0.63–1	—	—	—	—	0.5	0.5	450 A	GV2ME05▲	180.	GV2P05	233.
1–1.6	—	0.1	—	—	0.75	1	450 A	GV2ME06▲	180.	GV2P06	233.
1.6–2.5	—	0.667	0.5	0.5	1	1.5	450 A	GV2ME07▲	180.	GV2P07	233.
2.5–4	1/8	0.333	0.75	1	2	3	450 A	GV2ME08▲	180.	GV2P08	233.
4–6.3	1/4	0.5	1.5	1.5	3	5	450 A	GV2ME10▲	180.	GV2P10	233.
6–10	0.5	1.5	2	3	5	7.5	450 A	GV2ME14▲	180.	GV2P14	233.
9–14	0.75	2	3	3	10	10	450 A	GV2ME16▲	224.	GV2P16	278.
13–18	1	3	5	5	10	15	450 A	GV2ME20▲	224.	GV2P20	278.
17–23	1.5	3	5	7.5	15	20	450 A	GV2ME21▲	224.	GV2P21	278.
20–25	2	3	5	7.5	15	20	450 A	GV2ME22▲	224.	GV2P22	278.
24–32	2	5	10	10	20	30	450 A	GV2ME32	224.	GV2P32	278.
9–13	0.5	1.5	3	3	7.5	10		—	—	GV3P13	404.
12–18	0.75	2	5	5	7.5	10		—	—	New! GV3P18	404.
17–25	1.5	3	7.5	7.5	15	20		—	—	GV3P25	404.
23–32	2	3	10	7.5	20	25		—	—	GV3P32	404.
30–40	3	5	10	10	25	30		—	—	GV3P40	504.
37–50	3	7.5	15	10	30	40		—	—	GV3P50	504.
48–65	3	10	20	15	40	50		—	—	GV3P65	504.

▲ For spring terminals add 3 to the catalog number, for example, GV2ME013. GV2ME32 is not available with spring terminals.

GV3P

Table 18.127:

Thermal Setting (A)	Maximum Horsepower Ratings						Toggle Operator			
	1Ø		3Ø				Standard Interrupt		High Interrupt	
	115 V hp	230 V hp	200 V hp	230 V hp	460 V hp	575 V hp	Catalog Number	$ Price	Catalog Number	$ Price
12–20	—	—	—	5	10	15	GV7RE20	417.	GV7RS20	813.
15–25	—	—	—	7.5	15	20	GV7RE25	417.	GV7RS25	813.
25–40	—	—	—	10	30	30	GV7RE40	417.	GV7RS40	813.
30–50	—	—	—	15	30	40	GV7RE50	417.	GV7RS50	813.
48–80	—	—	—	30	60	75	GV7RE80	417.	GV7RS80	813.
60–100	—	—	—	30	75	100	GV7RE100	456.	GV7RS100	891.
90–150	—	—	—	50	100	150	GV7RE150	502.	GV7RS150	978.
132–220	—	—	—	75	150	200	GV7RE220	502.	GV7RS220	978.

GV7RE20

Specifications. . . . . .page 18-36
Accessories . . . . . pages 18-34 to 18-35
Dimensions . . . . . pages 18-52 to 18-55

E164864
CCN NLRV

LR81630
Class 3211 05

© 2009 Schneider Electric
All Rights Reserved

GVAU116

Table 18.128: Voltage Trips

Only one trip or fault signaling contact can be installed per GV2/GV3 device.					
Description	**Characteristics**	**Voltage**	**Frequency**	**Catalog Number▲**	**$ Price**
Voltage trips GV2 & GV3P	Undervoltage or Shunt trip (external mount, 1 block right side only)	24 V	50 Hz	GVA•025	81.00
			60 Hz	GVA•026	
		48 V	50 Hz	GVA•055	
			60 Hz	GVA•056	
		100–110 V	50/60 Hz	GVA•107	
		110–115 V	50 Hz	GVA•115	
			60 Hz	GVA•116	
		120–127 V	50 Hz	GVA•125	
		127 V	60 Hz	GVA•115	
		200 V	50 Hz	GVA•207	
		200–220 V	60 Hz	GVA•207	
		220–240 V	50 Hz	GVA•225	
			60 Hz	GVA•226	
		380–400 V	50 Hz	GVA•385	
			60 Hz	GVA•386	
		415–440 V	50 Hz	GVA•415	
		415 V	60 Hz	GVA•416	
		440 V	60 Hz	GVA•385	
		480 V	60 Hz	GVA•415	
		500 V	50 Hz	GVA•505	
		600 V	60 Hz		

▲ To order an under voltage trip: replace the bullet (•) with a **U**, example: **GVAU025**. To order a shunt trip: replace the bullet (•) with an **S**, example: **GVAS025**.

GVAE11

Table 18.129: Auxiliary Contact Blocks

Description	Mounting Location	Max. No. of Blocks	Contact Type	Sold in lots of	Catalog Number	$ Price
Instantaneous auxiliary contacts GV2 + GV3P	Front■□	1	N.O. or N.C.♦	1	GVAE1	21.80
			N.O. + N.C.	10	GVAE11▼	35.70
			N.O. + N.O.	1	GVAE20▼	35.70
	Left Hand Side	2	N.O. + N.C.	1	GVAN11▼	35.70
			N.O. + N.O.	1	GVAN20▼	35.70
Fault signaling contact + instantaneous auxiliary contact GV2 + GV3P	Left Hand Side★	1	N.O. (fault) + N.O.	1	GVAD1010	54.00
			N.O. (fault) + N.C.	1	GVAD1001	54.00
			N.C. (fault) + N.O.	1	GVAD0110	54.00
			N.C. (fault) + N.C.	1	GVAD0101	54.00
Short circuit signaling contact GV2 + GV3P	Left Hand Side	1	SPDT	1	GVAM11	35.70

■ Mounting of a **GVAE** contact block or a **GV2AK00** visible isolation block on **GV2P**.
♦ Choice of N.C. or N.O. contact operation, depending on which way the reversible block is mounted.
★ The **GVAD** is always mounted next to the starter.
▼ For spring terminals add 3 to the catalog number. Example: **GVAE113**
△ One trip or one fault signaling can be fitted per GV3.
□ Cannot be used with **GV2GH7** insulator.

GVAD0101

Table 18.130: Voltage Trips–Technical Data (GV2AU, GV2AS)

Rated Voltage–660 Vac					
Model	**Inrush**	**Sealed**	**Pick-Up Voltage**	**Drop-Out Voltage**	**Operating Time◊**
GVAU	12 VA / 8 W	3.5 VA / 1.1 W	0.8 to 1.1	0.35 to 0.7	10 to 15 ms
GVAS	14 VA / 10.5 W	5 VA / 1.6 W	0.7 to 1.1	0.2 to 0.75	10 to 15 ms

◊ From the loss of voltage at the trip terminals to the opening of the starter contacts.

Table 18.131: GV3P Accessories *New!*

Description	For GV3P	Catalog Number	$ Price
Set of 3-pole 115 A busbars (tap-offs: 2, pitch: 64 mm)	GV3P••	GV3G264	25.00
Set of 3-pole 115 A busbars (tap-offs: 3, pitch: 64 mm)	GV3P••	GV3G364	45.00
Cover "Larger Spacing" UL 508 type E (Only one cover required on supply side)	GV3P••	GV3G66	18.00
IP 20 cover (Two covers required per starter)	GV3P••	LAD96570	12.00
Padlocking device For use with up to 4 padlocks (not supplied) Ø 6 mm shank maximum	GV3P•• GV3P•••	GV2V03	15.00

GVAN11

© 2009 Schneider Electric
All Rights Reserved

GV7AC01

Table 18.132: Auxiliary contact blocks (auxiliary contact functions depends on location inside the device)

Description	Mounting Location	Max. No. of Blocks	Contact Type	Catalog Number	$ Price
Standard					
Instantaneous	Inside Device	2 per device	N.O. + N.C.	GV7AE11	**35.70**
Trip Indication		1 per device	N.O. + N.C.		
Fault Indication		1 per device	N.O. + N.C.		
Low Level					
Instantaneous	Inside Device	2 per device	N.O. + N.C.	GV7AB11	**35.70**
Trip Indication		1 per device	N.O. + N.C.		
Fault Indication		1 per device	N.O. + N.C.		

GV7RE20

Table 18.133: Voltage Trips

Description	Mounting Location	Max. No. of Blocks	Voltage		Catalog Number	$ Price
Undervoltage Trip	Inside Device	1 per device	48 Vac 110–130 Vac 200–240 Vac 380–440/480 Vac 525 Vac	50 Hz 50/60 Hz 50/60 Hz 50/60 Hz 50 Hz	GV7AU055 GV7AU107 GV7AU207 GV7AU387 GV7AU525	**64.00**
Shunt Trip	Inside Device	1 per device	48 Vac 110–130 Vac 200–240 Vac 380–440/480 Vac 525 Vac	50 Hz 50/60 Hz 50/60 Hz 50/60 Hz 50 Hz	GV7AS055 GV7AS107 GV7AS207 GV7AS387 GV7AS525	**64.00**
Fault Indication	Inside Device	1 per device	24–130 110–415		GV7AD111 GV7AD112	**72.00**

GV7AD111

Table 18.134: Wiring Accessories

Description	Application	Catalog Number	$ Price
Box Lugs	Sold in lots of 3 for GV7R•20–150☆	GV7AC021	**19.70 each**
	Sold in lots of 3 for GV7R•220☆	GV7AC022	**24.90 each**
Phase Barriers, Bus Bars & Shrouds			
Terminal Extension Kit	Increases center distance between phases to 45 mm	GV7AC03	**46.70**
Terminal Shroud Kit	Covers terminal connections for touch safe protection	GV7AC01	**41.90**
Phase Barriers	Provides maximum phase separation at connection points	GV7AC04	**31.10**
Insulating Barriers	Provides insulation between connectors and backplate	GV7AC05	**24.90**
Busbars and Covers	Connect to LC1F115–185 contactor	GV7AC06	**46.70**
	Connect to LC1F225–265 contactor	GV7AC07	**46.70**
Operating Handles and Accessories			
Black rotary operating handle with black legend plate (mounts directly on device)		GV7AP03	**86.00**
Red rotary operating handle with yellow legend plate (mounts directly on device)		GV7AP04	**86.00**
Conversion accessory to mount device directly on panel door		GV7AP05	**14.00**
Black rotary operating handle with black legend plate and extension kit (185–600 mm)		GV7AP01	**102.00**
Red rotary operating handle with yellow legend plate and extension kit (185–600 mm)		GV7AP02	**102.00**
Padlocking device for toggle handle (max. 38 mm padlocks)		GV7V01	**14.00**

☆ Wire size: GV7AC021—#14–3/0; GV7AC022—#14–350 kcmil.

GV7AS055

Dimensions . . . . . pages 18-52 to 18-55

GV7AP03

GV7AC021

GV7V01

GV7AE11

© 2009 Schneider Electric
All Rights Reserved

- 45 mm wide (same dimensions as GV2ME)
- Available with screw clamp and spring type terminals
- Mounts directly to LC1D09–D32 contactors (with use of GV2AF3 or GV2AF4)
- Meets application needs for fusible starter
- Uses GV2AE instantaneous contact blocks to open control circuits
- DIN rail mounted

LS1D30

Table 18.135:

Description	Fuse Type	Dimensions		Use In	Catalog Number	$ Price
		IN	mm			
Spring terminals, 3-pole	CC, KTK-R	0.41 x 1.5	10.3 x 38	US Markets	LS1D303	**86.**
Screw clamp terminals, 3-pole	CC, KTK-R	0.41 x 1.5	10.3 x 38	US Markets	LS1D30	**86.**
Spring terminals, 3-pole	aM, gG	0.39 x 1.5	10 x 38	European Markets	LS1D323	**101.**
Screw clamp terminals, 3-pole	aM, gG	0.39 x 1.5	10 x 38	European Markets	LS1D32	**86.**
Auxiliary main pole adder	aM, gG	0.39 x 1.5	10 x 38	European Markets	LA8D324▲	**65.**

▲ Can be mounted on left-hand or right-hand side of the 3-pole LS1D32 block.

Table 18.136: Specifications

Type	LS1D30, LS1D303	LS1D32, LS1D323, LS1DT32
Max. voltage	600 V 3 Phase	
Max. current	30 A	
Conforming to standards	IEC 60947-1, 60947-2, 60947-4-1, EN60204, BS4841, UL 508, CSA 222.2 No. 14, NFC 63-650, 63-120, 79-130, VDE 0113, 0660	
Product approvals	UL, CSA	BV
Protective treatment	"TH"	"TH"
Ambient air temperature —operation	-58 to 158° F (-50 to +70° C)	
Wiring Number of conductors and cross sectional area (c.s.a.)	**Max.**	**Min.**
Solid cable	2–#8 AWG (2–6 mm^2)	2–#16 (2–1 mm^2)
Flexible cable without cable end	2–#8 AWG (2–6 mm^2)	2–#14 (2–1 mm^2)
Flexible cable with cable end	2–#10 AWG (2–4 mm^2)	2–#16 AWB (2–1 mm^2)
Resistance to mechanical impact conforming to IEC 60947-1 §7-1-6	0.5 J	
Tightening torque	15 in-lb (1.7 N•m)	
Sensitivity to phase failure	No	

Table 18.137: Specifications

Operating Positions:

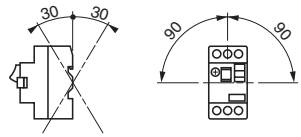

File E164864
CNN NLRV

File LR81630
Class 3211 05

Rated voltage—600 V

Rated thermal current—25 A (GV2), 63 A (GV3)

Mechanical life:
GV2: 100,000 operations

Shock resistance—30 g (conforming to IEC 600 68-2-27)

Vibration resistance—5 g (5 to 150 Hz) (IEC 600 68-2-26)

Ambient temperature:
-40 to 176°F (-40 to +80°C) for storage
-4 to 140°F (-20 to +60°C) open operation
-4 to 104°F (-20 to +40°C) enclosed operation

Maximum operating life—25 operations per hour

Operating current of magnetic trip is approximately 13 times maximum thermal trip (non-adjustable setting)

© 2009 Schneider Electric
All Rights Reserved

GV2GH7

Table 18.138: GV2 Mounting Accessories

Description	Application	Standard Pack ■	Catalog Number	$ Price Each
Common mounting plate	For GV2 plus any 3-pole LC1D09 thru LC1D25 contactor. (supplied with GV1G02 connector)	1	GK2AF01	21.60
Adapter plate	For screw mounting of GV2M	10	GV2AF02	7.10
Combination block	Interconnect for GV2 plus any 3-pole LC1K or LP1K contactor Interconnect GV2 and LC1D09 thru D32 Interconnect GV2 and LC1D09 thru D32 mounted on LAD31	10 10 10	GV2AF01 GV2AF3 GV2AF4	14.00 3.20 3.20
7.5 mm compensation plate	To allow mounting of GV2M and GV2P on a common bus bar	10	GV1F03	5.40
Mounting plate	For mounting GV2ME or GV2P and contactor LC1D09 thru D32	10	LAD31	6.20
		10	LAD311	12.30

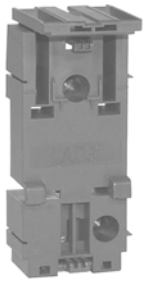
LAD31

Table 18.139: GV2 Cabling Accessories—Bus Bars

Description	Application	Pitch	Standard Pack ■	Catalog Number	$ Price Each
3-Pole, 63 A Bus Bar	For feeding 2 GV2 starters	45 54 72	1 1 1	GV2G245 GV2G254 GV2G272	23.30 23.30 23.30
	For feeding 3 GV2 starters	45 54	1 1	GV2G345 GV2G354	28.70 28.70
	For feeding 4 GV2 starters	45 54 72	1 1 1	GV2G445 GV2G454 GV2G472	34.20 34.20 34.20
	For feeding 5 GV2 starters	54	1	GV2G554	34.20

Table 18.140: GV2 Other Cabling Accessories

Description	Application	Standard Pack ■	Catalog Number	$ Price Each
Terminal blocks	Top feed for use with bus bars	1	GV1G09	34.20
	Bottom feed, to be used with bus bars; can be fitted with GV1L3 current limiter	1	GV2G05	34.20
Protective end cover	To cover unused bus bar outlets	5	GV1G10	3.60
3-pole flexible connector	For connecting a GV2 to an LC1D09 thru D25 contactor	10	GV1G02	14.30
Conduit adapter (1Ɛ" NPT)		1	GV2AK1	16.20
Incoming line insulator	For GV2P when used in UL 508 Type E applications▲	10	GV2GH7	15.00

▲ Cannot be used with front-mounted auxiliary contact block.

Table 18.141: GV2 Other Accessories

Description	Application	Standard Pack ■	Catalog Number	$ Price Each
Visible isolation block - GV2P	Front mount, 3-pole visible isolation on incoming side of GV2P	1	GV2AK00	71.40
Current limiter - GV2M	Increases interrupt capacity when attached to GV2M	1	GV1L3	117.00
Through-Door operator - GV2P	For operating GV2P through enclosure door (red handle, yellow legend plate) For NEMA 1 use. IP54	1	GV2AP02	135.00

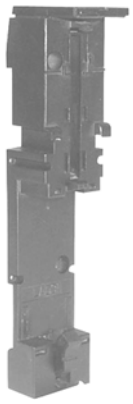
LAD311

Table 18.142: GV2 Enclosures

Description	Mounting	Rating	Catalog Number	$ Price Each
Enclosures for GV2M with or without accessories (maximum of 1 accessory on right and left) Enclosures are not UL or CSA listed.	Surface mount	NEMA 1, IP41 IP55	GV2MC01 GV2MC02	54.00 78.00
	Flush mount	NEMA 1, IP41 IP55	GV2MP01 GV2MP02	31.10 54.00
	Flush mount reduced width (max. of 1 accessory on right)	NEMA 1, IP41 IP55	GV2MP03 GV2MP04	27.90 49.70

Table 18.143: GV2 Enclosures Accessories

Description	Type		Standard Pack■	Catalog Number	$ Price Each
Padlocking device for GV2M (when padlocked, starter is automatically in Off position)			1	GV2V01	26.90
Mushroom head stop push button (40 mm, red) ♦	Spring return		1	GV2K011	35.90
	Latching	Key release (Ronis key no. 455)	1	GV2K021	104.00
		Turn to Release	1	GV2K031	52.00
	Latching / Padlockable Turn to Release		1	GV2K04	117.00
Sealing kit	For enclosures GV2MC01 and GV2MP01		10	GV2E01	18.00
Pilot Light (neon)	110 V	Green	10	GV2SN13	26.90
	110 V	Red	10	GV2SN14	
	110 V	Orange	10	GV2SN15	
	110 V	White	10	GV2SN17	
	220/240 V	Green	10	GV2SN23	
	220/240 V	Red	10	GV2SN24	
	220/240 V	Orange	10	GV2SN25	
	220/240 V	White	10	GV2SN27	
	380/440 V	Green	10	GV2SN33	
	380/440 V	Red	10	GV2SN34	
	380/440 V	Orange	10	GV2SN35	
	380/440 V	White	10	GV2SN37	

■ Orders must specify multiples of quantities listed.
♦ Supplied with IP55 sealing kit.

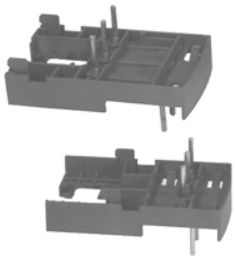
GV2AF3 / GV2AF4

© 2009 Schneider Electric
All Rights Reserved

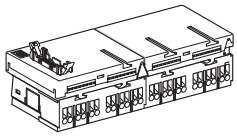

APP2R4H1

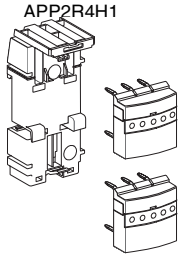

LAD35

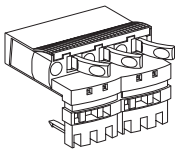

LAD3B

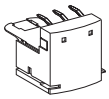

LAD33

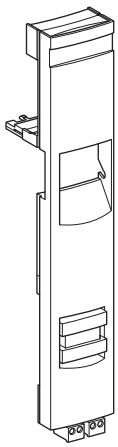

APP2D1•

Table 18.144: Splitter Boxes

A total of up to eight starters is permissible after extensions. Use multiple quantities of the same catalog number to create the desired line-up.

Description	Type of Control-command Connection on Control System Side	No. of I/O per Starter	No. of Starters per Unit	Catalog Number	$ Price
50 A power splitter box	—	—	2	LAD322	**52.00**
			4	LAD324	**93.00**
50 A power and control splitter box	1 x HE10 8I/8O	1I/1O	4	APP2R4H1	**124.00**
	1 x HE10 16I and 1 x HE10 8O	2I/1O	4	APP2R4H2	**124.00**
	Via module APP1C••• ▲	—	2	APP2R2E	**124.00**
			4	APP2R4E	**124.00**
	AS-i	2I/1O	2	APP2R2AS	**124.00**
		1I/1O	4	APP2R4AS	**124.00**

▲ Connection to an APP1C••• module via APP2CX adaptor (LAD35).

Table 18.145: Power Connection Components for One Starter

Description	Kit Consists of:	Catalog Number	$ Price
Assembly and power connection kit	One LAD31 plate for GV2ME and two LAD34 power connection modules	LAD351	**21.00**
Reversing kit ■	One set of bus bars and one mechanical interlock	LAD32	**20.70**

■ To create a TeSys D reverser, use two LC1D contactors, one assembly and power connection kit, and one reversing kit.

Table 18.146: Power Connection Accessories for One Starter

Description	Max. Connection Cross-Section	Use	Catalog Number	$ Price
Upstream terminal block (50 A max)	16 mm^2 (6 AWG)	Power supply for one or two power splitter boxes	LAD3B	**83.00**
Downstream terminal block (50 A max)	6 mm^2 (10 AWG)	Connection of motor cables	LAD331	**5.00**

Table 18.147: Control Connection Module for One Starter

Description	D-Line Coil Voltage	Type of Coil Control Relay	Type of Starter	Catalog Number	$ Price
Control connection module (integrating contact block GVAE20)	12–240 Vac or 24–125 Vdc	Electromechanical ♦	Non-reversing	APP2D1	**41.40**
			Reversing	APP2D2	**72.00**
	24–48 Vdc	Without relay ★	Non-reversing	APP2D1D	**31.10**
			Reversing	APP2D2D	**31.10**

♦ Relay supplied mounted on the front panel of the control connection.
★ The use of TeSys D low consumption contactors is recommended.

Table 18.148: Spare or Replacement Parts

Description	Type of Control-command Connection on Control System Side	No. of I/O per Starter	No. of Starters	Sold in Lots of	Catalog Number	$ Price
Plate for mounting a GV2ME manual starter	—	—	1	10	LAD31	**6.20**
			1	10	LAD311	**12.30**
Power connection module	—	—	1	10	LAD341	**7.50**
Control-command splitter box (single, for mounting on a power splitter box)	1 x HE10 8I/8O	1I/1O	4	1	APP2R4H3	**11.30**
	1 x HE10 16I and 1 x HE10 8O	2I/1O	4	1	APP2R4H4	**11.30**
	Per module APP1C••• ▼	—	2	1	APP2R2C	**11.30**
			4	1	APP2R4C	**11.30**
	AS-Interface	2I/1O	2	1	APP2R2A	**11.30**
		1I/1O	4	1	APP2R4A	**11.30**
Replacement electromechanical relay (for control connection module)		—	1	10	APP2ER	**7.50**

▼ Connection to an APP1C••• module via APP2CX adaptor (LAD35).

© 2009 Schneider Electric
All Rights Reserved

The AK5 pre-fabricated bus bar system provides a quick and easy method of mounting control devices. All components are finger safe, UL Listed, CSA approved and CE marked. Although the AK5 system can be screw mounted onto any type of support, it **must be mounted** on the AM1DL201 DIN rail when component mounting plates incorporating a tap-off are used. When using tap-offs, the nominal operating current of the bus bar (160 Amperes @ 35°) must not be exceeded.

AK5JB143

Table 18.149: 160 Ampere Three Phase Busbar System

Maximum number of mounting plates						Length		Catalog Number	$ Price
Tap-off		Standard Width Plate		Extension Plate					
IN	mm	IN	mm	IN	mm				
1.42	36	2.13	54	2.80	71	IN	mm		
6		4		2		13.39	344	AK5JB143	**210.00**
9		6		3		17.64	452	AK5JB144	**266.00**
12		8		4		21.85	560	AK5JB145	**286.00**
15		10		5		26.05	668	AK5JB146	**345.00**
24		16		8		38.69	992	AK5JB149	**393.00**
27		18		9		42.90	1100	AK5JB1410	**540.00**

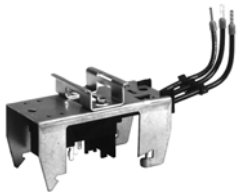

AK5PA231

Table 18.150: Mounting Plate Tap-off
Plugs into busbar mounted on AM1DL201 DIN rail.

Width		Thermal Current Amperes	Application	Catalog Number	$ Price
IN	mm				
2.13	54	25 A	LUS or LUB 12 and 32 & GV2	AK5PA231	**98.00**
2.13	54	25 A	GV2 & Contactor	AK5PA232	**120.00**
4.25	108	25 A	GV2 & Reversing Contactor	AK5PA232S	**206.00**

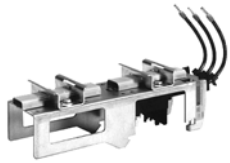

AK5PA232S

Table 18.151: Bus Tap-off
Plugs into busbar for wiring to a separately mounted device.

Width		Thermal Current Amperes	Length of Leads		Catalog Number	$ Price
IN	mm		IN	mm		
1.42	36	32 A	9.84	250	AK5 PC33	**23.00**
1.42	36	32 A	39.37	1000	AK5 PC33L	**37.80**

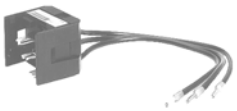

AK5PC33

Table 18.152: Extension Plates
Used to mount wider components. Bolt to standard mounting plates (after DIN rails are removed).

Width		Application	Catalog Number	$ Price
IN	mm			
2.80	71	GV & Reversing contactor	AK5PE27	**26.30**

Table 18.153: Mounting Rail
Must be used for mounting plates with tap-offs.

Description	Depth	Length	Catalog Number	$ Price
	mm	mm		
75 mm Omega Rail	15	2000	AM1DL201	**41.10**

AM1DL201

Table 18.154: Approvals: IEC 439, UL, CSA, DNV, LROS

File E161251
CCN NMTR

File LR 89150
Class 6228-01

© 2009 Schneider Electric
All Rights Reserved

Table 18.155: TeSys D Contactors AC Control Circuits

LC1D09 to D18 (3-pole) and LC1DT12 to LC1DT40 (4 pole)

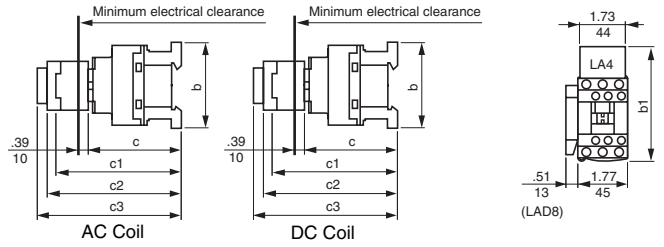

LC1D25 to D38 (3-pole)

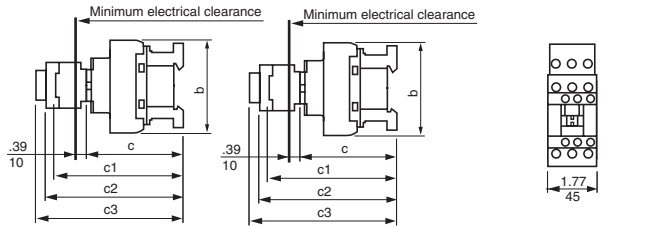

LC1		D09 to D18	D093 to D18	D099 to D189	D25 to D38	D183 and D323	DT20 and DT25	DT203 and DT253	DT32 to DT40	DT323 and DT403
		IN (mm)	IN (mm)	IN (mm)	IN (mm)	IN (mm)	IN (mm)	IN (mm)	IN (mm)	IN (mm)
b	AC coil, without add-on accessories	3.03 (77)	3.89 (99)	3.14 (80)	3.36 (85)	3.89 (99)	3.34 (85)	3.89 (99)	3.58 (91)	4.13 (105)
	DC coil									
b1	AC coil, with LAD4BB ■	3.70 (94)	4.21 (107)	3.75 (95.5)	3.85 (98)	4.21 (107)	3.85 (98)	—	—	—
	AC coil, with LA4D*2 ■	4.33 (110) ▲	4.84 (123) ▲	4.30 (111.5) ▲	4.48 (114) ▲	4.84 (123) ▲	4.48 (114)	—	—	—
	AC coil, with LA4DF, DT ■	4.68 (119) ▲	5.19 (132) ▲	4.76 (120.5) ▲	4.84 (123) ▲	5.19 (132) ▲	5.02 (129)	—	—	—
	AC coil, with LA4DR, DW, DL ■	4.96 (126) ▲	5.67 (139) ▲	5.0 (127.5) ▲	5.11 (130) ▲	5.47 (139) ▲	7.48 (190)	—	—	—
c	AC coil, without cover or add-on blocks	3.30 (84)	3.30 (84)	3.30 (84)	3.54 (90)	3.54 (90)	3.54 (90)	3.54 (90)	3.85 (98)	3.85 (98)
	AC coil, with cover, without add-on blocks	3.38 (86)	3.38 (86)	3.38 (86)	3.62 (92)	3.62 (92)	3.62 (92)	3.62 (92)	3.93 (100)	3.93 (100)
	DC coil, without cover or add-on blocks	3.66 (93)	3.66 (93)	3.66 (93)	3.89 (99)	3.89 (99)	—	—	—	—
	DC coil, with cover, without add-on blocks	3.76 (95)	3.76 (95)	3.76 (95)	3.97 (101)	3.97 (101)	3.90 (99)	3.90 (99)	4.21 (107)	4.21 (107)
c1	AC coil, with LADN or C (two or four contacts)	4.60 (117)	4.60 (117)	4.60 (117)	4.84 (123)	4.84 (123)	4.84 (123)	4.84 (123)	5.15 (131)	5.15 (131)
	DC coil, with LADN or C (two or four contacts)	4.96 (126)	4.96 (126)	4.96 (126)	5.19 (132)	5.19 (132)	4.84 (123)	4.84 (123)	5.15 (131)	5.15 (131)
c2	AC coil, with LAD6K10	5.07 (129)	5.07 (129)	5.07 (129)	5.31 (135)	5.31 (135)	5.31 (135)	5.31 (135)	5.62 (143)	5.62 (143)
	DC coil, with LAD6K10	5.43 (138)	5.43 (138)	5.43 (138)	5.66 (144)	5.66 (144)	5.31 (135)	5.31 (135)	5.62 (143)	5.62 (143)
c3	AC coil, with LADT,R,S	5.39 (137)	5.39 (137)	5.39 (137)	5.62 (143)	5.62 (143)	5.62 (143)	5.62 (143)	5.94 (151)	5.94 (151)
	AC coil, with LADT,R,S and sealing cover	5.55 (141)	5.55 (141)	5.55 (141)	5.78 (147)	5.78 (147)	5.78 (147)	5.78 (147)	6.10 (155)	6.10 (155)
	DC coil with LADT,R,S	5.76 (146)	5.76 (146)	5.76 (146)	5.98 (152)	5.98 (152)	5.62 (143)	5.62 (143)	5.94 (151)	5.94 (151)
	DC coil with LADT,R,S and sealing cover	5.90 (150)	5.76 (146)	5.76 (146)	6.14 (156)	6.14 (156)	5.78 (147)	5.78 (147)	6.10 (155)	6.10 (155)

▲ Including LAD4BB
■ Not applicable to devices with DC coils

Table 18.156: AC Coil

LC1D40, D50, D65 (3P), LC1D65004 (4P)

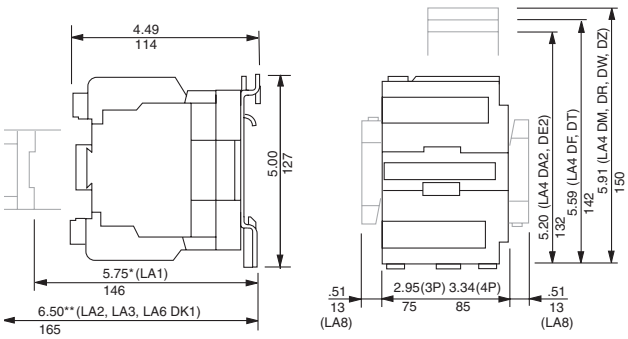

xcept LA1DN10, DN01 = 136
+4 mm with lead sealing device

LC1D80004 (4P)

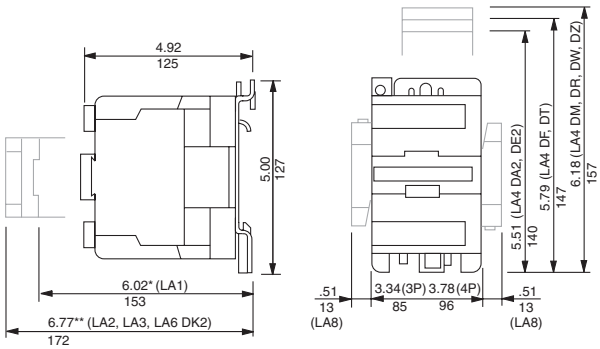

*except LA1DN10, DN01 = 136
** +4 mm with lead sealing device

LC1 D40A…D65A (3P), LC1 DT60A…DT80A (4P) AC OR DC

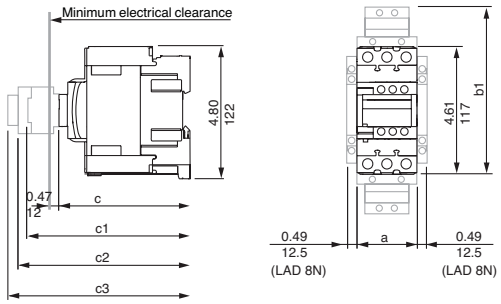

LC1		D40A…D65A	DT60A…DT80A	D40008
		IN (mm)	IN (mm)	IN (mm)
a		2.17 (55)	2.76 (70)	3.35 (85)
b1	with LA4 D•2	—	—	5.31 (135)
	with LA4 DB3 or LAD 4BB3	5.35 (136)	—	—
	with LA4 DF, DT	6.18 (157)	—	5.59 (142)
	with LA4 DM, DW, DL	6.54 (166)	—	5.91 (150)
c	without cover or add-on blocks	4.65 (118)	4.65 (118)	4.92 (125)
	with cover, without add-on blocks	4.72 (120)	4.72 (120)	—
c1	with LAD N (1 contact)	—	—	5.47 (139)
	with LAD N or C (2 or 4 contacts)	5.91 (150)	5.91 (150)	5.79 (147)
c2	with LAD 6K10 or LA6 DK	6.42 (163)	6.42 (163)	6.26 (159)
c3	with LAD T, R, S	6.73 (171)	6.73 (171)	6.57 (167)
	with LAD T, R, S and sealing cover	6.89 (175)	6.89 (175)	6.73 (171)

© 2009 Schneider Electric
All Rights Reserved

Table 18.157: DC Coil

LC1D40, D50, D65 (3P), LC1D650004, (4P)

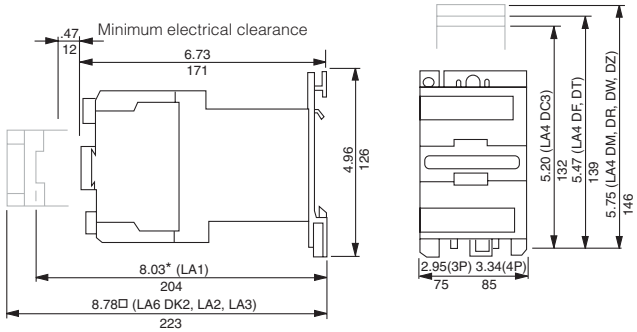

*except LA1DN10, DN01 = 136
□ + 4 mm with lead sealing device

LC1D80 (3P), LC1D800004(4P)

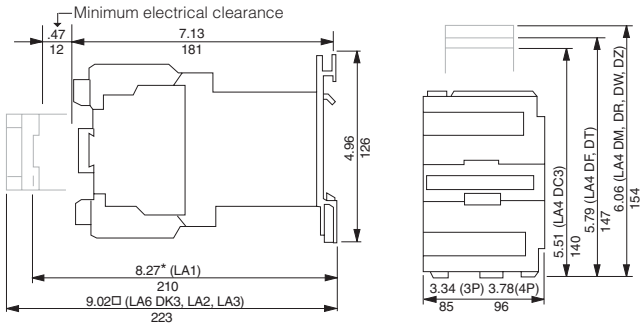

*except LA1DN10, DN01 = 143
□ + 4 mm with lead sealing device

LC1D115, D150
Panel mounted with 1/4" screws

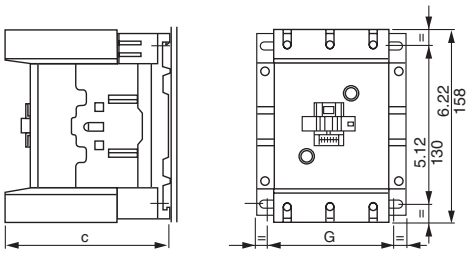

LC1	D115	D1156	D150	D1506
c	5.12 (132)	4.53 (115)	5.12 (132)	4.53 (115)
G (3-poles)	3.78/4.33 (96/110)	3.78/4.33 (96/110)	3.78/4.33 (96/110)	3.78/4.33 (96/110)
G (4-poles)	5.12/5.67 (130/144)	5.12/5.67 (130/144)	—	—

LC1D115, D150

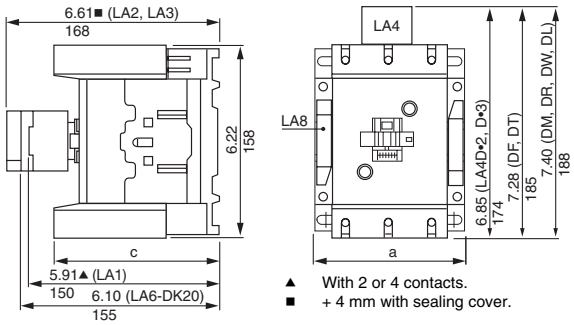

▲ With 2 or 4 contacts.
■ + 4 mm with sealing cover.

LC1	C	A
D115, D150	5.12 (132)	4.72 (120)
D115004	5.12 (132)	6.10 (155)
D1156, D1506	4.53 (115)	4.72 (120)
D1150046	4.53 (115)	6.10 (155)

LR2D4 bimetallic overload relay
Direct mounting beneath contactors
LC1D115 and D150

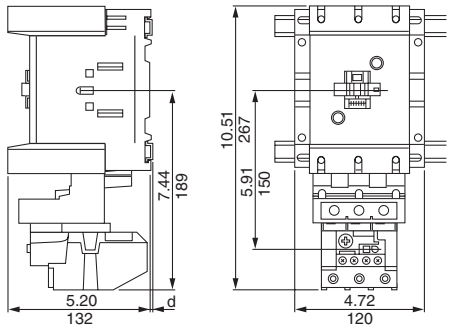

35 mm DIN rail dimensions

	AM1DP200 and **DR200**	**AM1DE•••** and **ED•••**
d	0.10 (2.5)	.41 (10.5)

LR9D solid-state overload relay
Direct mounting beneath contactors
LC1D115 and D150

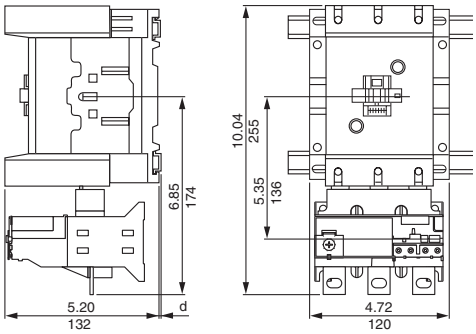

35 mm DIN rail dimensions

	AM1DP200 and **DR200**	**AM1DE•••** and **ED•••**
d	0.10 (2.5)	.41 (10.5)

Note: All dimensions are in Inches (mm).

© 2009 Schneider Electric
All Rights Reserved

LC1F115 to F330

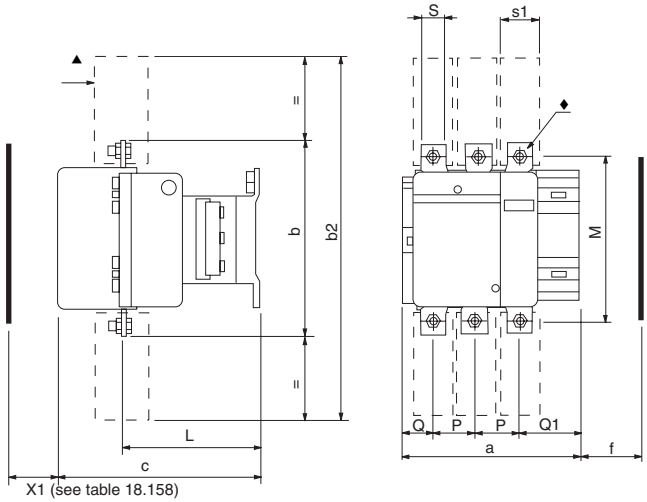

▲ Protective cover Type LA9F70•.

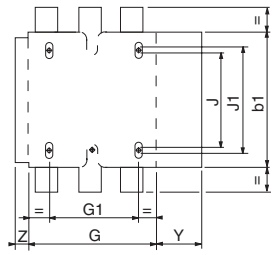

All dimensions shown in mm.
To convert to inches divide by 25.4.

Table 18.158:

LC1	F115		F150		F185		F265		F330	
	3-Pole	4-Pole	3-Pole	4-Pole	3-Pole	4-Pole	3-Pole	4-Pole	3-Pole	4-Pole
a	163.5	200.5	163.5	200.5	168.5	208.5	201.5	243.5	213	261
b	162	162	170	170	174	174	203	203	206	206
b1	137	137	137	137	137	137	145	145	145	145
b2	265	265	301	301	305	305	370	370	375	375
c	165■	165■	165■	165■	176	176	207	207	219	219
f	131	131	131	131	130	130	147	147	147	147
G	106	143	106	143	111	151	142	190	154.5	202.5
G1	80	80	80	80	80	80	96	96	96	96
J	106	106	106	106	106	106	106	106	106	106
J1	120	120	120	120	120	120	120	120	120	120
L	107	107	107	107	113.5	113.5	141	141	145	145
M	147	147	150	150	154	154	178	178	181	181
P	37	37	40	40	40	40	48	48	48	48
Q	29.5	29.5	26.5	26	29	29	39	34	43	43
Q1	60	60	57.5	55.5	59.5	59.5	66.5	66.5	74	74
S	15	15	20	20	20	20	25	25	25	25
S1	27	27	34	34	34	34	38	38	44.5	44.5
Y	44	44	44	44	44	44	38	38	38	38
Z	13.5	13.5	13.5	13.5	13.5	13.5	21.5	21.5	20.5	20.5

■ +6 mm with time delay block (for F115 and F150).
♦ Optimal terminal shroud
Note: f = minimum distance required for coil removal.

Table 18.159:

Voltage in V	220/380	415/440	500	660	1000
LC1F115, F150	20	25	30	40	20
LC1F185	20	25	30	40	30
LC1F265	20	25	40	50	40
LC1F330	25	35	40	50	50

Note: X1: Minimum clearance according to the operational voltage and the breaking capacity.

LC1F400 to F500

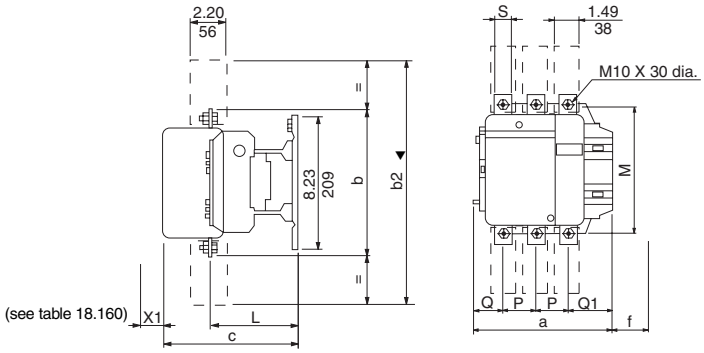

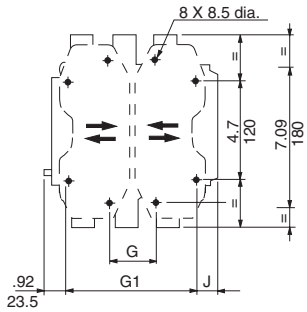

Dual Dimensions: **INCHES**
Millimeters

Table 18.160:

LC1	F400			F500		
	2-Pole	3-Pole	4-Pole	2-Pole	3-Pole	4-Pole
a	213	213	261	233	233	288
b	206	206	206	238	238	238
b2	375	375	375	400	400	400
c	213	213	213	226	226	226
f	119	119	119	141	141	141
G★	80	80	80	80	80	140
G min.	66	66	66	66	66	66
G max.	102	102	150	120	120	175
G1★	170	170	170	170	170	230
G1 min.	156	156	156	156	156	156
G1 max.	192	192	240	210	210	265
★ Supplied						
J	19.5	19.5	67.5	39.5	39.5	34.5
L	145	145	145	146	146	146
M	181	181	181	208	208	208
P	48	48	48	55	55	55
Q	69	43	43	76	46	46
Q1	96	74	74	102	77	77
S	25	25	25	30	30	30

▼ Protective cover.
Note: f = Minimum distance required for coil removal.

Table 18.161:

Voltage in V	220/230	415/440	500	660	1000
LC1F400	30	40	40	50	60
LC1F500	40	45	50	60	60

Note: X1: Minimum clearance according to the operational voltage and the breaking capacity.

© 2009 Schneider Electric
All Rights Reserved

LC1F630 and LC1F800

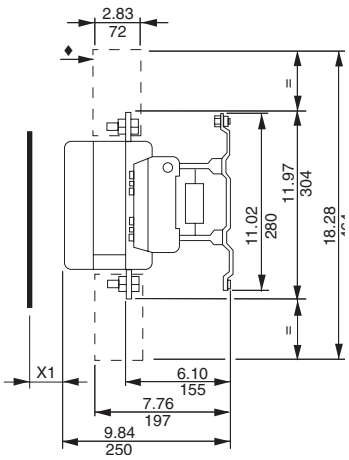

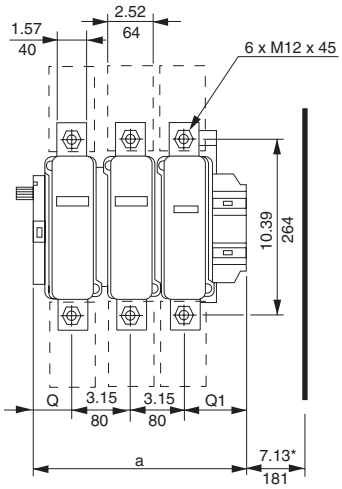

Dual Dimensions: **INCHES**
Millimeters

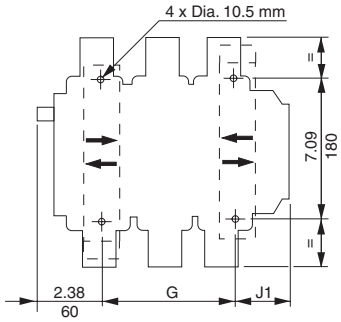

	LC1F630	a		G supplied		G min.		G max.		J1		Q		Q1	
		IN	mm	IN	mm	IN	mm	IN	mm	IN	mm	IN	mm	IN	mm
* = minimum distance required for coil removal. ♦ Protective terminal cover.	2 P	12.17	309	7.09	180	3.94	100	7.68	195	2.70	68.5	4.02	102	5.00	127
	3 P	12.17	309	7.09	180	3.94	100	7.68	195	2.70	68.5	2.36	60	3.50	89
	4 P	15.31	389	9.45	240	5.91	150	10.83	275	2.70	68.5	2.36	60	3.50	89

X1:Minimum clearance according to the operational voltage and the breaking capacity.

Voltage in V	380	415/440	500	660	1000
X1 in mm	60	60	60	70	80

LC1F780, F7804

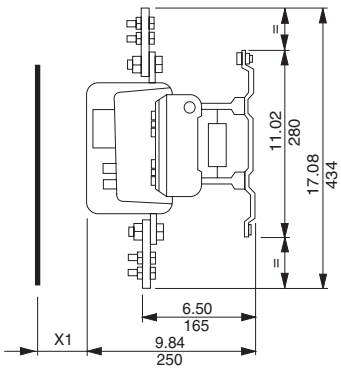

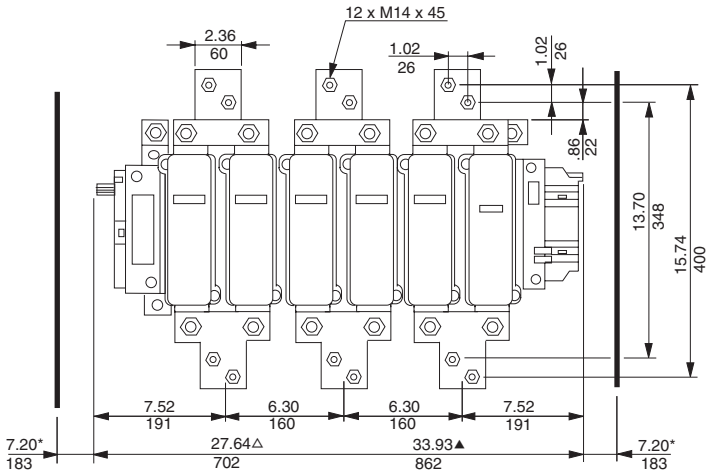

X1: Minimum clearance according to the operational voltage and the breaking capacity.

Voltage in V	380	415/440	660	1000
X1 in mm	90	100	120	120

△ Overall length (3 poles)
▲ Overall length (4 poles)
*minimum distance required for coil removal.

LC1F780 mounting

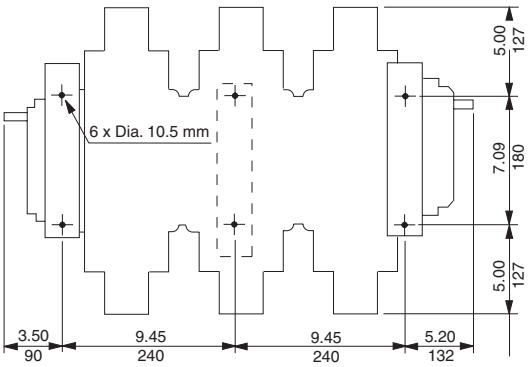

LC1F7804 mounting

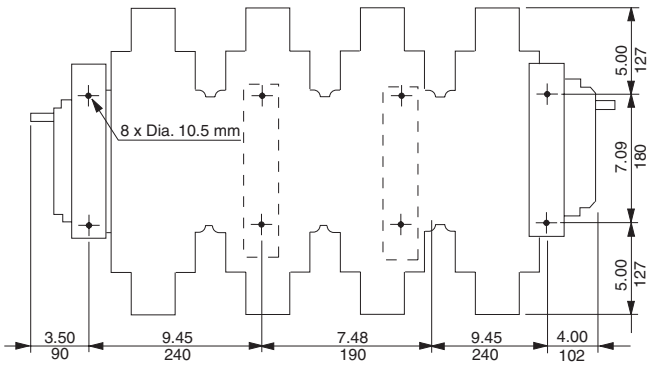

© 2009 Schneider Electric
All Rights Reserved

LC2D09 to D32
LC2DT20 to DT60
2 x LC1DT20 to DT60

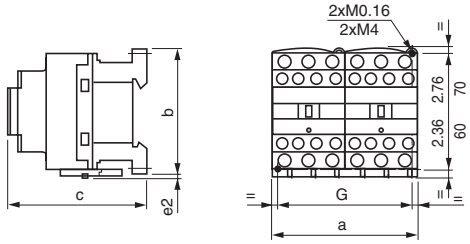

LC2 or 2 x LC1	a	b	c	G
	IN (mm)	IN (mm)	IN (mm)	IN (mm)
DT20 and DT25	3.54 (90)	3.34 (85)	3.54 (90)	3.14 (80)
DT32 to DT60	3.54 (90)	3.58 (91)	3.85 (98)	3.14 (80)

c, e2: includes cabling.

2 x LP1D40, D65, D80, D95

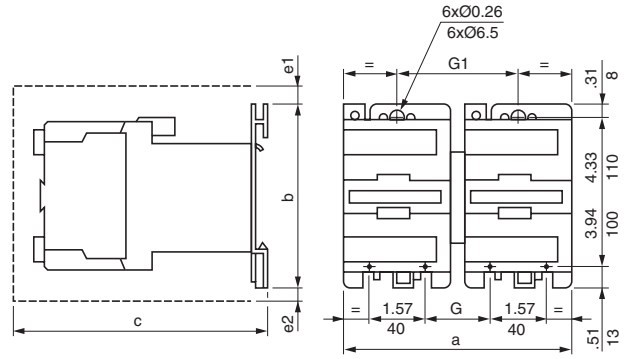

LC2 or 2 x LC1	a	b	c	e1	e2	G	G1
	IN (mm)	IN (mm)	IN (mm)	IN (mm)	IN (mm)	IN (mm)	IN (mm)
D40 to D65	7.16 (182)	5.0 (127)	7.4 (190)	1.19 (5)	0.43 (11)	2.2 (57)	3.8 (97)
D80 and D95	8.14 (207)	5.0 (127)	8.4 (215)	0.51 (13)	0.78 (20)	3.7 (96)	4.3 (111)

c, e1 and e2: includes cabling.

LC2D115 and D150
2 x LC1D115 and D150
Panel mounted with 1/4" screw

Dimensions shown in millimeters
(mm ÷ 25.4 = inches)

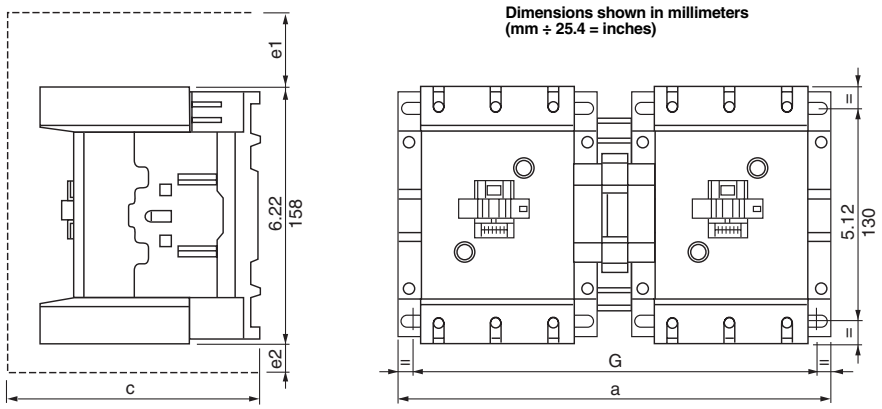

LC2 or 2 x LC1 (3-pole)	a	c	e1	e2	G
D115, D150	266	148	56	18	242/256
LC2 or 2 x LC1 (4-pole)	**a**	**c**	**e1**	**e2**	**G**
D115	334	148	—	60	310/324

c, e1 and e2 includes cabling

NOTE: *For dimensions of TeSys F reversing contactors, please refer to Catalog* **8502CT9901**.

© 2009 Schneider Electric
All Rights Reserved

LRD-01-35
Independent mounting on 50 mm centers or on rail AM1DP200 or DE200

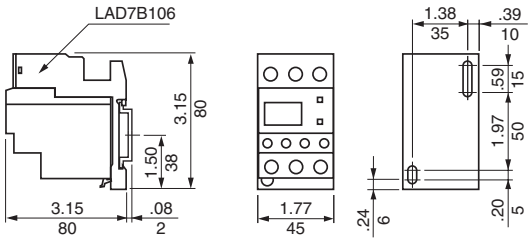

Remote tripping or electrical reset

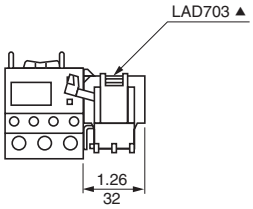

▲ Can only be mounted on RH side of relay LRD-01 to 35

Independent mounting on 110 mm centers

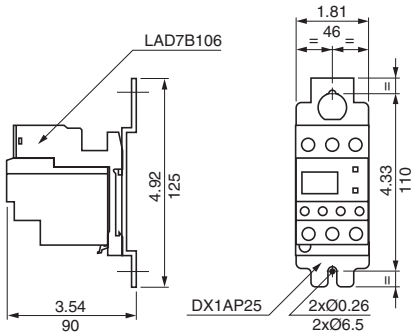

LRD, LR2D and LR9D
"Reset" by flexible cable LA7D305 and LAD7305
Mounting with cable straight

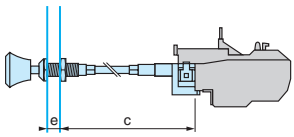

Mounting with cable bent

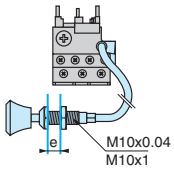

c: up to 21.6in (550 mm)
e: up to 0.79in (20 mm)

LRD3●●
Beneath LC1D●●A contactor

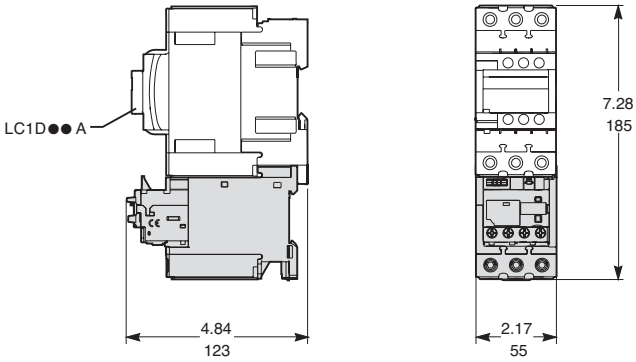

Separate mounting

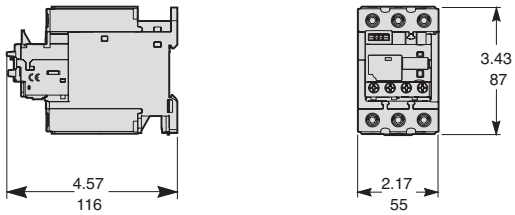

LR2D1, LR3D1
Separate mounting at 50 mm (1.97") centers or on AM1DP200 or DE200 rail

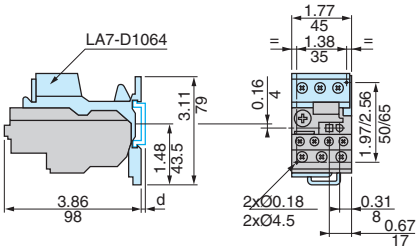

LR2D2, LR3D2
Separate mounting at 50 mm (1.97") centers or on AM1DP200 or DE200 rail

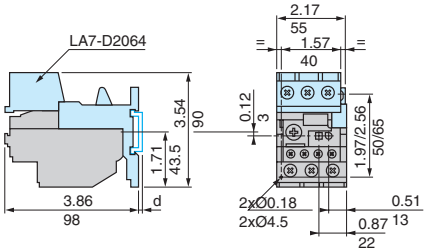

LR2D1, LR3D1
Separate mounting at 110 mm (4.33") centers

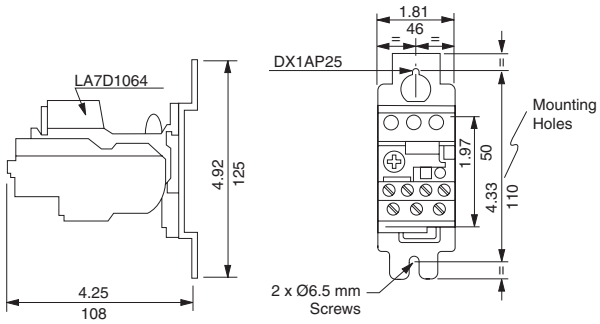

LR2D2, LR3D2
Separate mounting at 110 mm (4.33") centers

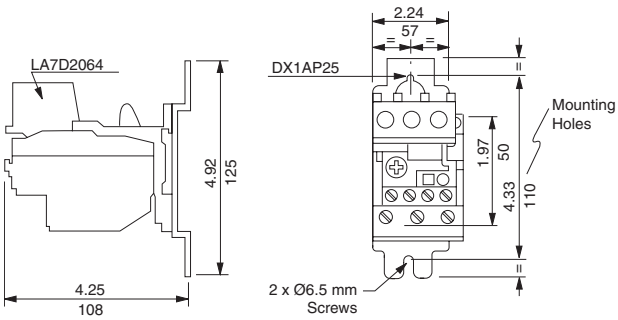

© 2009 Schneider Electric
All Rights Reserved

LRD-01-35
Direct mounting beneath contactors with screw

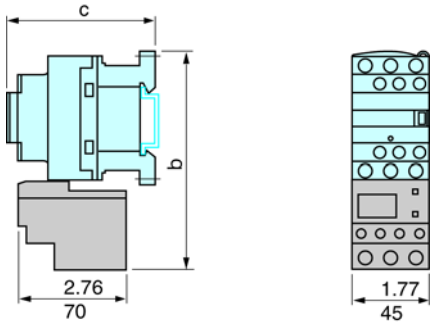

LC1•	D09–D18	D25–D38
b	4.84 (123)	5.39 (137)
c	See Catalog 8502CT9901 pages 122, 123.	

LRD-013-353
Direct mounting beneath contactors with spring terminal connections

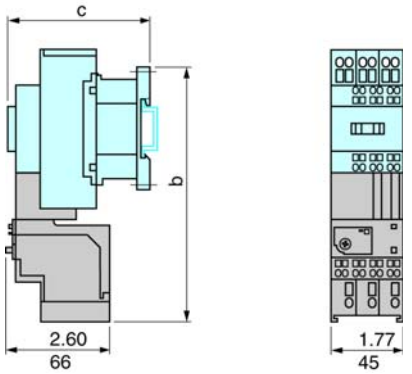

LC1•	D093–383
b	4.84 (123)
c	See Catalog 8502CT9901 pages 122, 123.

LRD-3•••
Direct mounting beneath contactors
LC1-D40 to D95 and LP1-D40 to D80

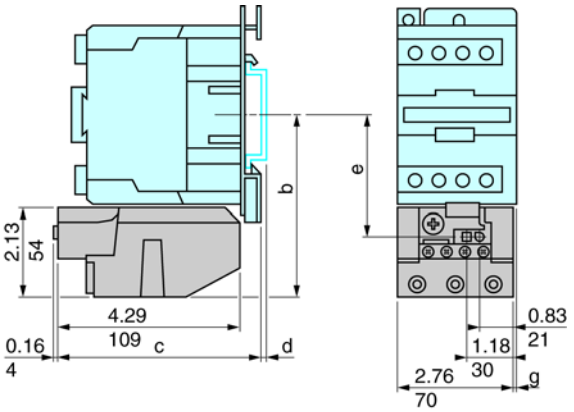

AM1•	DL201	DL200				
d	0.28 (7)	0.67 (17)				
		b	c	e	g(3P)	g(4P)
AC Control Circuit						
LC1D40		4.37 (111)	4.69 (119)	2.85 (72.4)	0.18 (4.5)	0.51 (13)
LC1D50		4.37 (111)	4.69 (119)	2.85 (72.4)	0.18 (4.5)	—
LC1D65		4.37 (111)	4.69 (119)	2.85 (72.4)	0.18 (4.5)	0.51 (13)
LC1D80		4.55 (115.5)	4.88 (124)	3.03 (76.9)	0.37 (9.5)	0.87 (22)
LC1D95		4.55 (115.5)	4.88 (124)	3.03 (76.9)	0.37 (9.5)	—
DC Control Circuit						
LC1D40, LP1D40		4.37 (111)	6.93 (176)	2.85 (72.4)	0.18 (4.5)	0.51(13)
LC1D50		4.37 (111)	6.93 (176)	2.85 (72.4)	0.18 (4.5)	—
LC1D65, LP1D65		4.37 (111)	6.93 (176)	2.85 (72.4)	0.18 (4.5)	0.51(13)
LC1D80, D95, LP1D80		4.55 (115.5)	7.06 (179.4)	3.03 (76.9)	0.37 (9.5)	0.87(22)

LRD4•••
Direct mounting beneath contactors
LC1D115 and D150

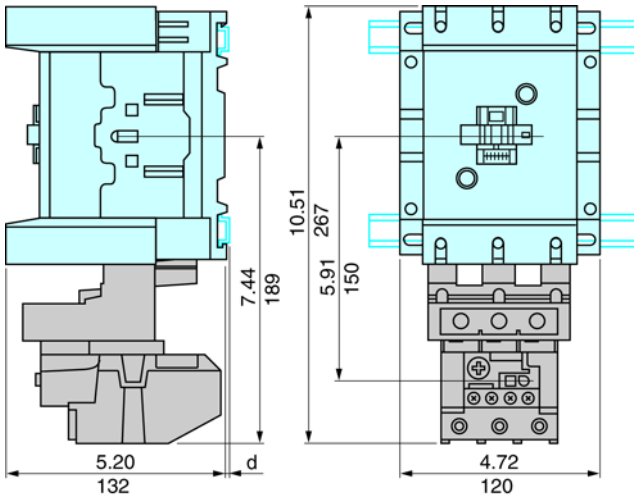

	AM1DL200 and DR200	AM1DE200 and ED•••
d	0.10 (2.5)	0.41 (10.5)

LR9D
Direct mounting beneath contactors
LC1D115 and D150

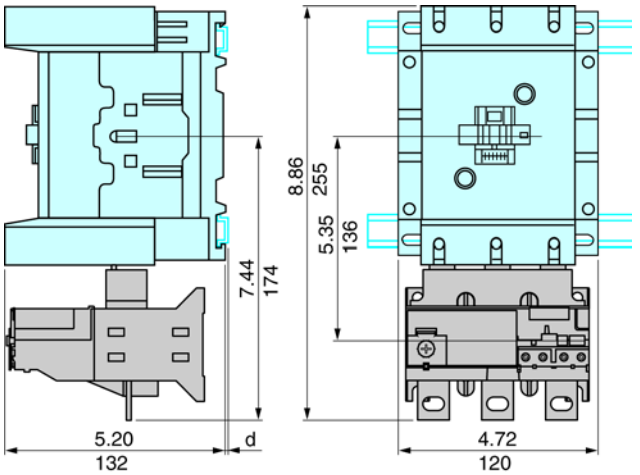

	AM1DP200 and DR200	AM1DE200 and ED•••
d	0.10 (2.5)	0.41 (10.5)

▲ For Additional characteristics and Catalog Number information, see Catalog **8502CT9901**

© 2009 Schneider Electric
All Rights Reserved

LR9F5•71

Common side view

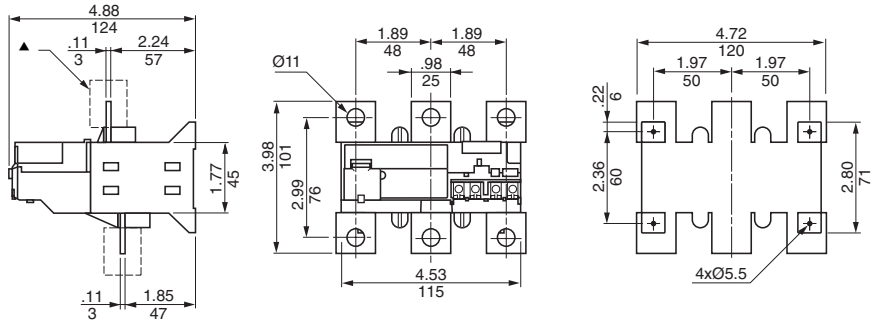

LR9F5•57, F5•63, F5•67, F5•69

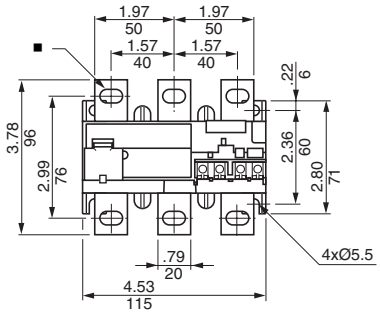

▲ Terminal shroud LA9F70•
■ 6.5 x 13.5 for LR9F5•57 and 8.5 x 13.5 for LR9F5•63, F5•67, F5•69

LR9F7•75, F7•79, F7•81

Common side view

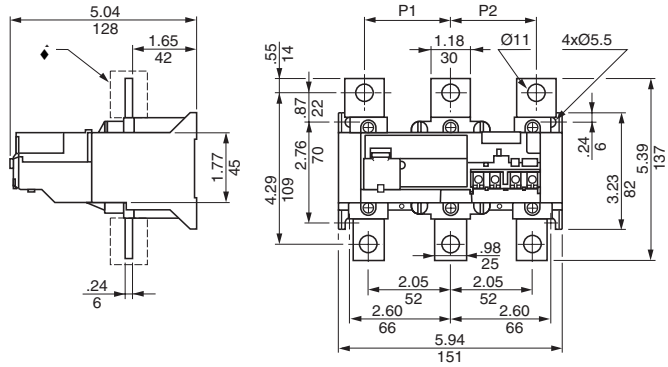

	P1	P2
LR9F7•75	48	48
LR9F7•79, F7•81	55	55

♦ Terminal shroud LA9-F70•

LR9F7•81

(for mounting beneath LC1F630)

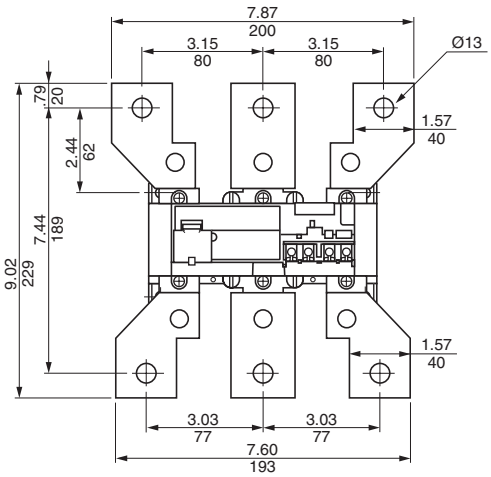

Direct mounting beneath contactor LC1-F

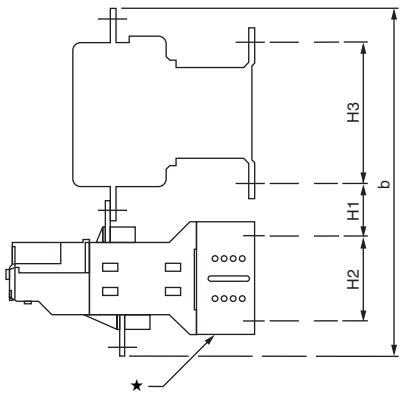

Direct mounting beneath reversing contactors or star-delta contactors

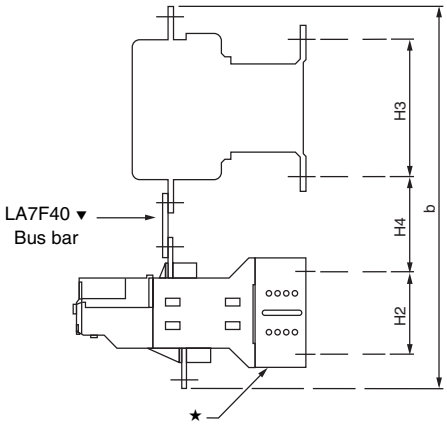

LC1 contactors	With LR9 relays	b	H1	H2	H3	LC1 contactors	With LR9 relays	b	H4	H2	H3
F115	F5•57, F5•63, F5•67, F5•69	240	30	76	120	F115	F5•57, F5•63, F5•67, F5•69	279	60	76	120
F150	F5•57, F5•63, F5•67, F5•69	246	30	76	120	F150	F5•57, F5•63, F5•67, F5•69	283	60	76	120
F185	F5•57, F5•63, F5•67, F5•69	250	30	76	120	F185	F5•57, F5•63, F5•67, F5•69	285	60	76	120
F225	F5•71	273	40	76	120	F225	F5•71	319	80	76	120
	F7•75, F7•79	308	50	108.8	120		F7•75, F7•79	360	100	108.8	120
F265	F5•71	279	40	76	120	F265	F5•71	332	90	76	120
	F7•75, F7•79	314	60	108.8	120		F7•75, F7•79	363	100	108.8	120
F330	F7•75, F7•79	317	60	108.8	120	F330	F7•75, F7•79	364	100	108.8	120
F400	F7•75, F7•79, F7•81	317	60	108.8	180	F400	F7•75, F7•79, F7•81	364	100	108.8	180
F500	F7•75, F7•79, F7•81	346	70	108.8	180	F500	F7•75, F7•79, F7•81	390	110	108.8	180
F630	F7•81	510	110	108.8	180	F630	F7•81	509	120	108.8	180

★ Relay mounting plate, see page 18-16.
▼ Connection Accessories, see page 18-16.

© 2009 Schneider Electric
All Rights Reserved

NEMA 1

D09-25 (FVNR)

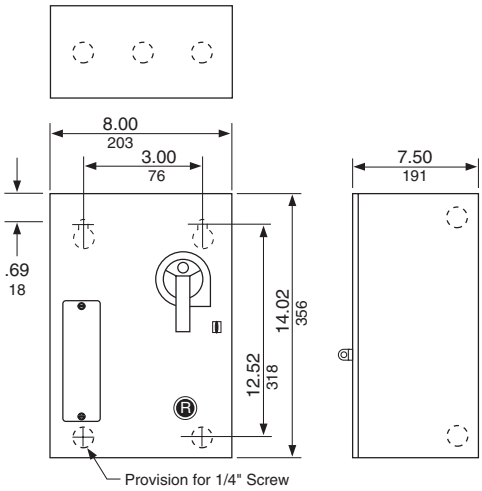

D09-40 (FVR); D32-40 (FVNR)

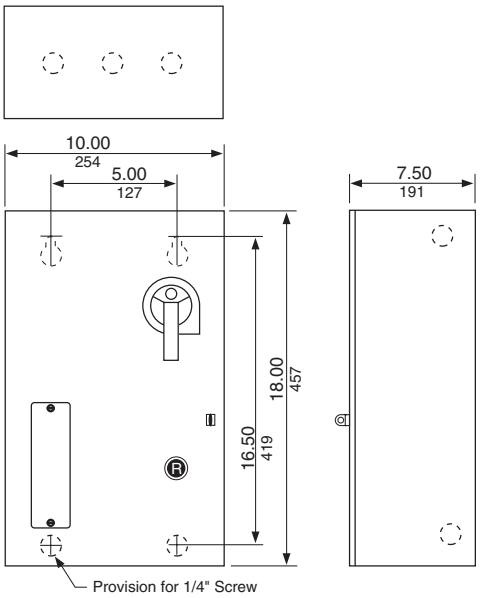

NEMA 12/3R

D09-25 (FVNR)

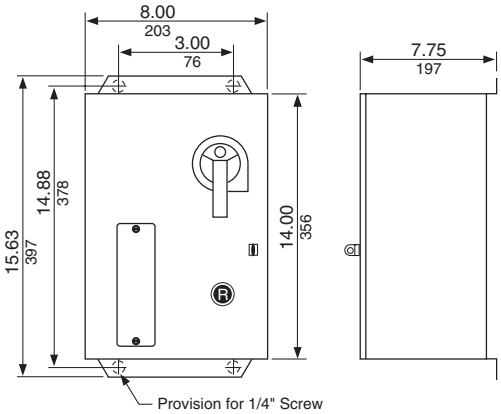

D09-40 (FVR); D32-40 (FVNR)

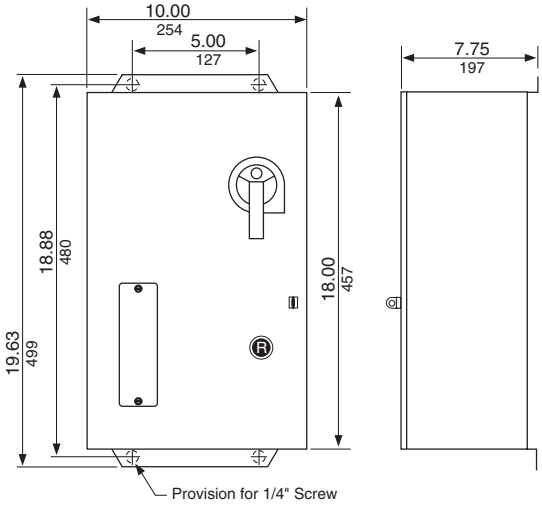

Non-combination Starter Dimensions

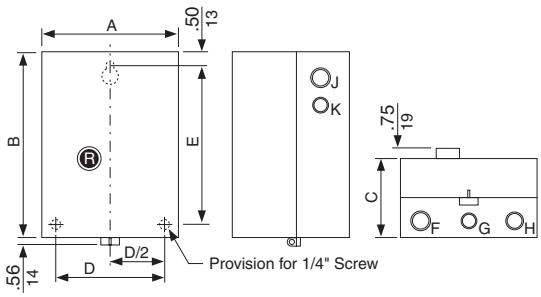

Table 18.162: Non-combination Starter Dimensions

		TYPE 1										TYPE 12/3R	
Non-reversing	**Reversing**	**A**	**B**	**C**	**D**	**E**	**F**	**G**	**H**	**J**	**K**	**D**	**E**
D09-32	—	6.77	10.04	6.25	5.38	9.00	1–1.25	0.5–0.75	—	1–0.25	0.5–0.75	5.38	11.37
D40-65	D09-32	8.66	10.83	7.21	7.25	9.75	1.25–1.5	0.5–0.75	1–1.25	1–0.25	0.5–0.75	5.38	12.15
D80	D40-80	10.63	13.98	7.21	9.22	12.94	1.25–1.5	0.5–0.75	1–1.25	1–1.25	0.5–0.75	5.38	15.30

Note: **All dimensions in inches.**

© 2009 Schneider Electric
All Rights Reserved

LR2K
Direct mounting under the contactor

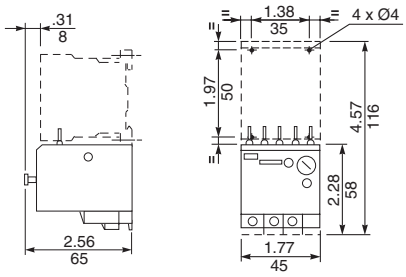

Separate mounting with LA7-K0064 terminal block on 35 mm ⏦ rail (AM1DP200 or AM1DE200)

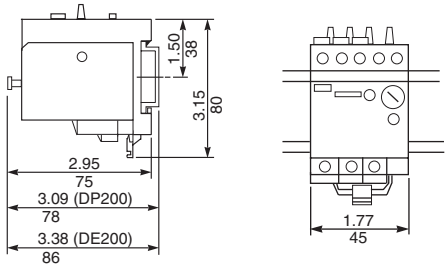

Three-phase

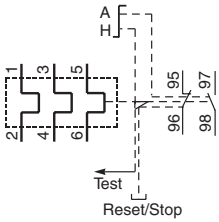

Wiring Scheme

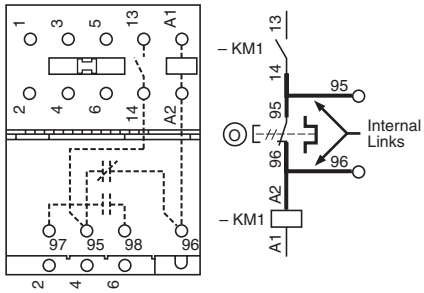

LC1, LP1, LP4K
mini-contactors
On baseplate

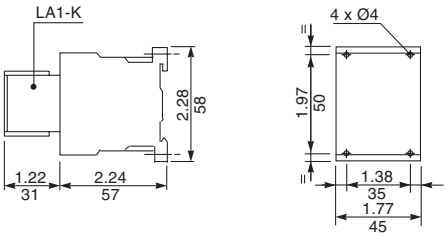

On AM1DP200 or DE200 rail (⏦ 35 mm)

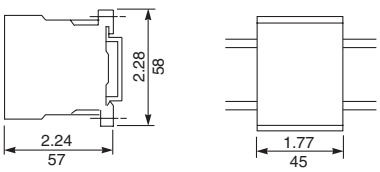

On printed circuit board

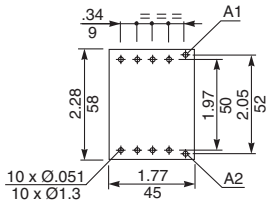

LC2, LC8, LP2, LP5K
reversing mini-contactors
On baseplate

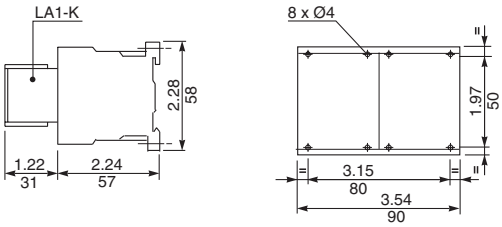

On AM1DP200 or DE200 rail (⏦ 35 mm)

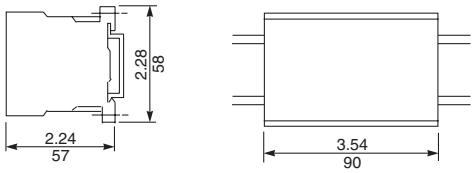

On printed circuit board for reversing contactors or 2 mini-contactors side-by-side

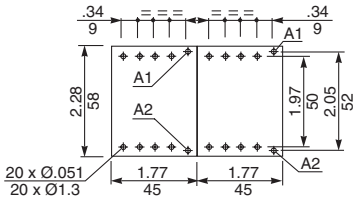

Table 18.163:

LA2KT

Electronic time delay contact blocks

Dual Dimensions: **INCHES**
Millimeters

On mini-contactors or reversing mini-contactors

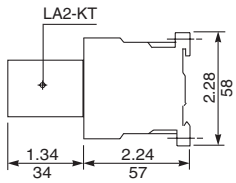

© 2009 Schneider Electric
All Rights Reserved

Starter Controllers

Non-reversing

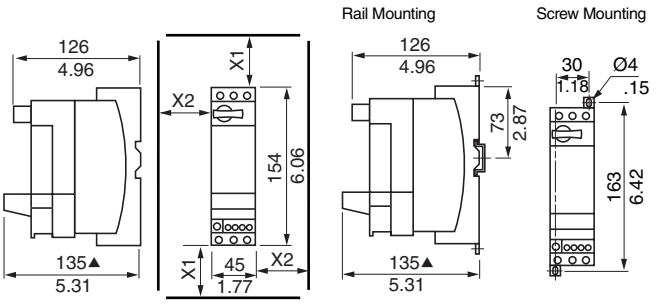

Reversing

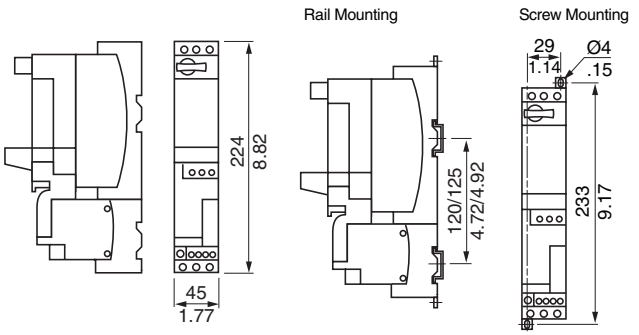

Note: Minimum electrical clearance:
X1 = 35 mm for Ue = 440 V and 70 mm for Ue = 500 and 690 V,
X2 = 0

▲ Maximum depth (with MODBUS® communication module)

Reversing block for mounting separately from power base

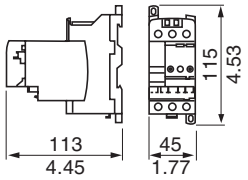

Rail Mounting

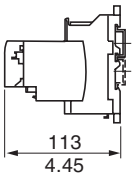

Screw Mounting

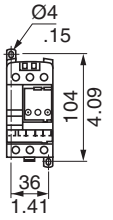

Limiter disconnector LUALB1

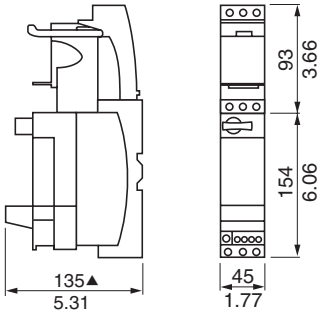

▲ Maximum depth (with MODBUS communication module)

Door interlock mechanisms

LU9AP00

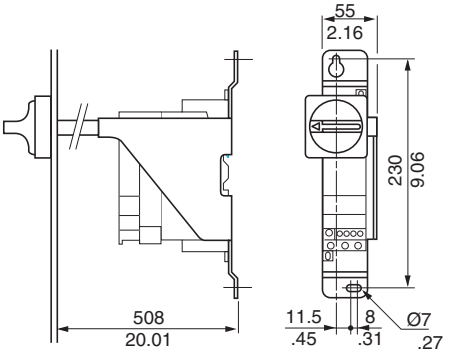

Door cut-out

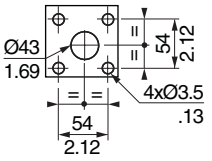

Dual Dimensions: **INCHES**
Millimeters

© 2009 Schneider Electric
All Rights Reserved

TeSys U combination
(non-reversing power base) and ATSU 01N212LT
Mounting on ⊥ (35mm) rail with VW3 G4104 connector

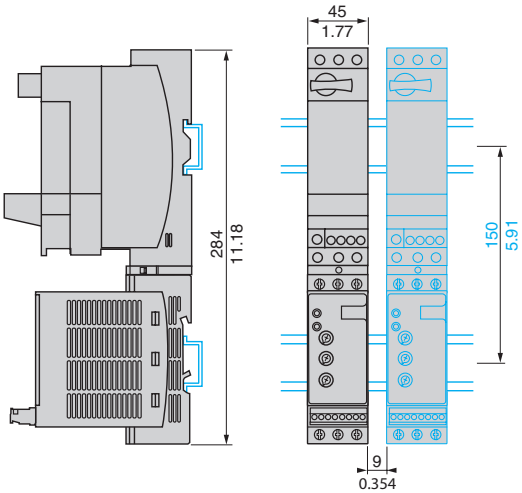

TeSys U combination
(non-reversing or reversing power base) and
ATSU 01N2206LT to ATSU 01N212LT
Side-by-side mounting

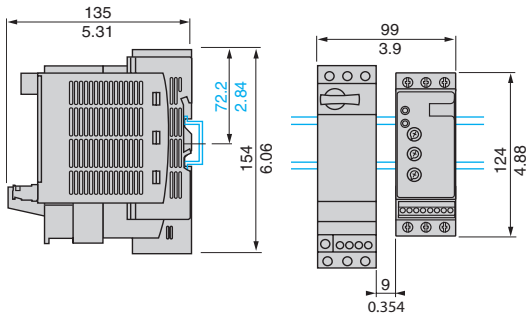

TeSys U combination
(non-reversing power base) and
ATSU 01N222LT to ATSU 01N232LT
Mounting on ⊥ (35mm) rail with VW3 G4104 connector

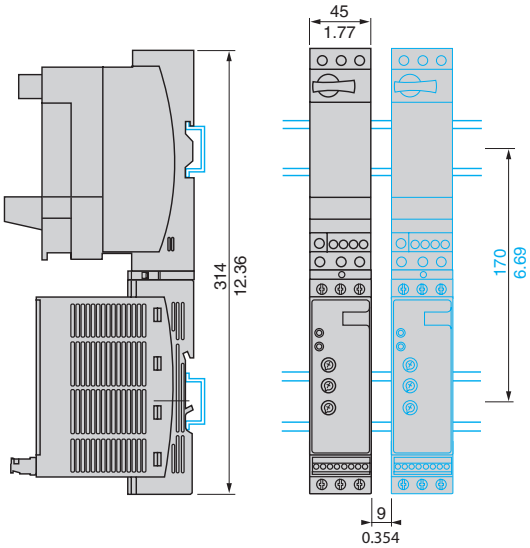

TeSys U combination
(non-reversing or reversing power base) and ATSU 01N222LT
to ATSU 01N232LT
Side-by-side mounting

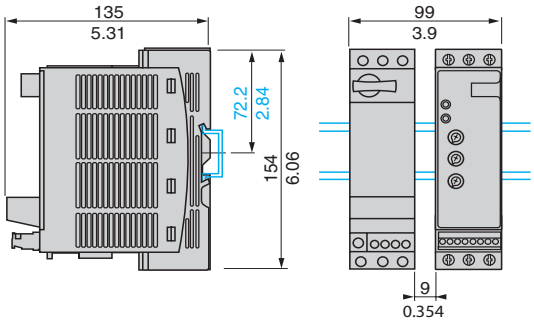

VW3 G4104 Power connector

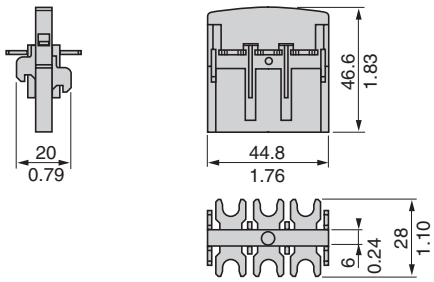

© 2009 Schneider Electric
All Rights Reserved

GV2M

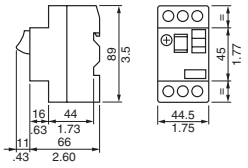

GV2AD, AM, AN, AU, AS, AX

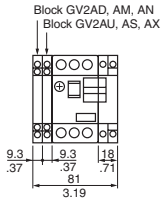

GV2AE

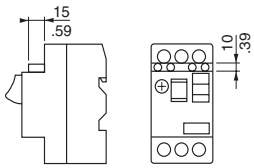

Mounting of GV2M

On 35 mm ⊔ rail
C = 78.5 mm (3.09") on AM1DP200 (35 x 7.5 mm)
C = 86 mm (3.39") on AM1DE200, ED200 (35 x 15 mm)

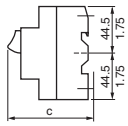

GV2P

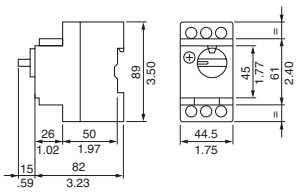

GV2AD, AM, AN, AU, AS, AX

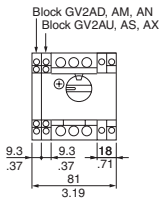

GV2AK00

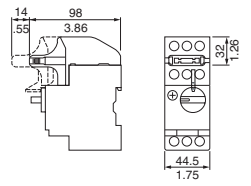

Mounting of GV2P

On 35 mm ⊔ rail
C = 98.5 mm (3.88") on AM1DP200
(35 x 7.5 mm)
C = 106 mm (4.17") on AM1DE200, ED200
(35 x 15 mm)

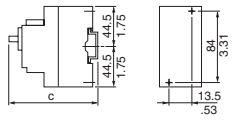

GV2AF4 + LAD31

Combination GV2ME + TeSys D range contactor

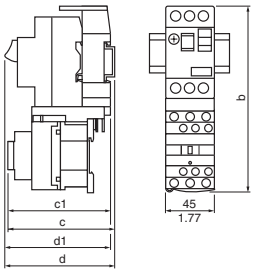

Combination GV2P + TeSys D range contactor

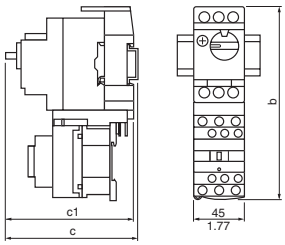

GV2P + GV2GH7

for UL 508 Type E application

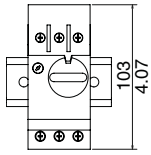

GV2P + GV2GH7 + TeSys D contactor

for UL 508 Type E application

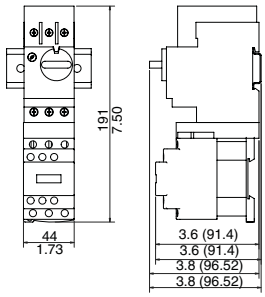

GV2ME +	LC2D09 to D18	LC2D25 and D32
b	7.4 (188.6)	7.8 (199)
c1	3.6 (92.7)	3.9 (99)
c	3.9 (98.2)	4.11 (104.5)
d1	3.9 (98.3)	3.9 (98.3)
d	4.1 (103.8)	1.4 (103.8)

GV2P +	LC2D09 to D18	LC2D25 and D32
b	6.61 (168.1)	7.9 (199.5)
c1	4.6 (116.8)	4.6 (116.8)
c	4.8 (122.3)	4.8 (122.3)
—	—	—
—	—	—

Surface mounting enclosure GV2MC0●

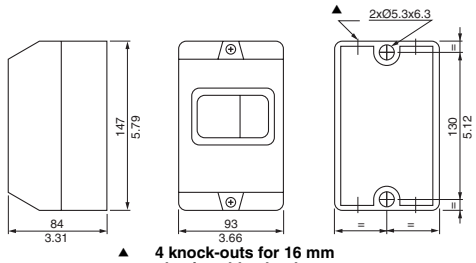

▲ **4 knock-outs for 16 mm plastic cable glands or no. 16 conduit.**

Flush mounting enclosure GV2MP0● (bracket cut-out)

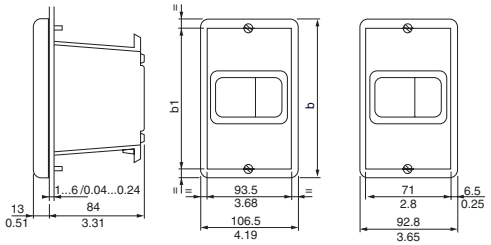

GV2	b		b1	
	IN	mm	IN	mm
MP01, MP02	5.51	140	5.00	127
MP03, MP04	5.24	133	4.61	117

© 2009 Schneider Electric
All Rights Reserved

GV2M with GK2AF01 and LC1K | **GV2M with GV2AF01 and LC1K** | **GV2M with GV2AF01 and LC2K** | **Adapter plate GK2AF01**

dimensions in mm

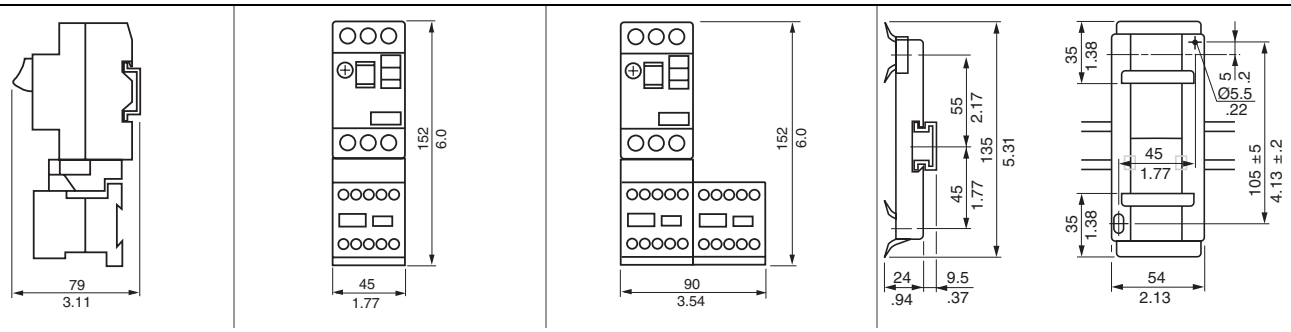

Mounting external operator GV2AP0● | **Door cut-out** | **GV2M on panel with GV2AF02 adapter plate** | **7.5 mm height compensation plate GV1F03**

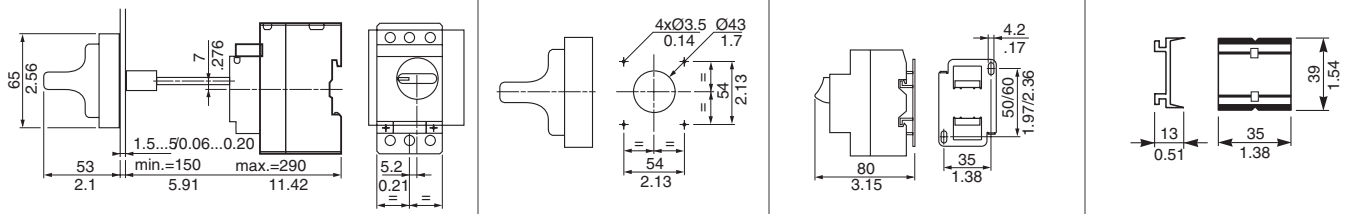

Sets of bus bars, GV2G445, GV2G454, GV2G472 with terminal block GV2G05

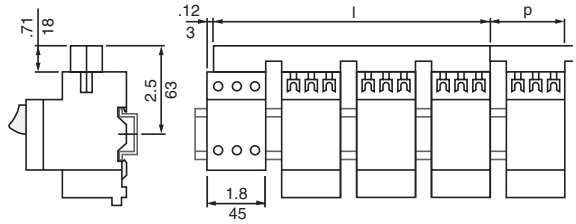

		l	P
GV2G445	0.16 x 1.8" (4 x 45 mm)	7.0" (179 mm)	1.8" (45 mm)
GV2G454	0.16 x 2.1" (4 x 54 mm)	8.1" (206 mm)	2.1" (54 mm)
GV2G472	0.16 x 1.8" (4 x 45 mm)	10.2" (260 mm)	2.8" (72 mm)

Sets of bus bars with terminal block GV1G09 | **Sets of bus bars GV2G245, GV2G254, GV2G272**

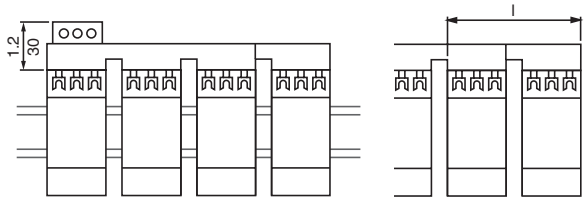

		l
GV2G245	0.08 x 1.8" (2 x 45 mm)	3.5" (89 mm)
GV2G254	0.08 x 2.1" (2 x 54 mm)	3.9" (98 mm)
GV2G272	0.08 x 2.8"(2 x 72 mm)	4.6" (116 mm)
GV2G354	0.12 x 2.1" (3 x 54 mm)	6.0" (152 mm)

GV3 P

Dimensions

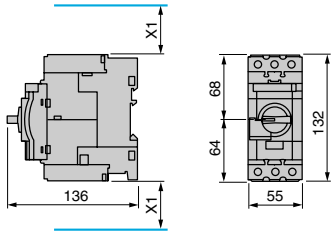

X1 = Electrical clearance (ISC max)
40 mm for Ue < 500 V, 50 mm for Ue < 690 V

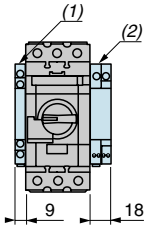

Blocks GV AN●●, GV AD●●, GV AM11
Block GV3 AU●● and GV3 AS●●

Mounting on rail AM1 DE200 or AM1 ED201

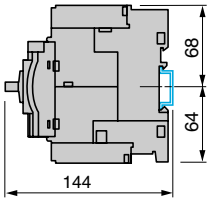

Mounting on panel, using M4 screws

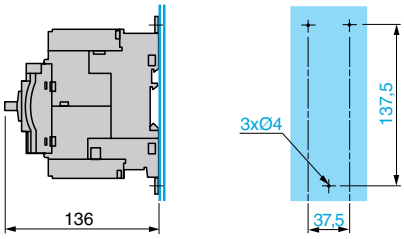

Mounting on pre-slotted mounting plate AM1 PA

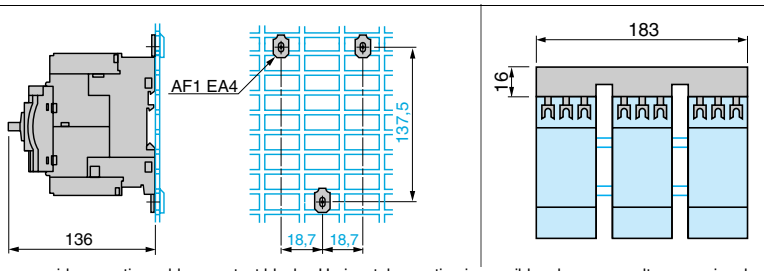

Note: Leave a space of 9 mm between 2 manual motor protectors: either an empty space or side-mounting add-on contact blocks. Horizontal mounting is possible: please consult your regional sales office.

© 2009 Schneider Electric
All Rights Reserved

1 GV7R

Panel Mounting	Flush Mounting	side by side

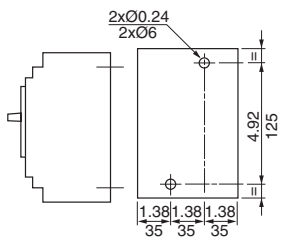

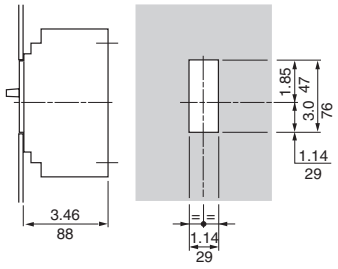

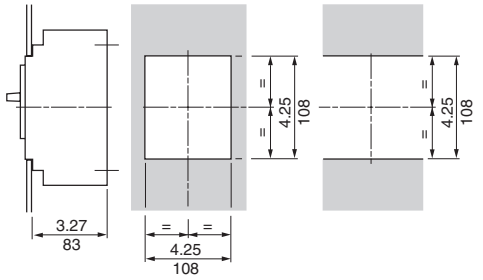

Minimum clearance		x1 IN (mm)	x2 IN (mm)
Painted or insulated metal plate, insulation or insulated bar		0 (0)	1.18 (30)
Bare metal plate	U ≤ 440 V	0.20 (5)	1.38 (35)
	440 V < U < 600 V	0.39 (10)	1.38 (35)
	U ≥ 600 V	0.79 (20)	1.38 (35)

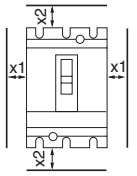

Note: Minimum distance between 2 units mounted side by side = 0.

Motor controllers GV7R

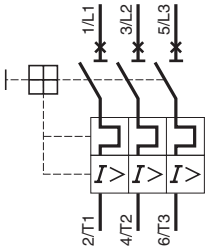

Add-on auxiliary contacts, GV7AE11, GV7AB11

Note: A self-adhesive label, supplied with the contact, can be affixed to the front face of the starter to allow personalized marking according to the function of the contact or contacts.

GV7AU•••

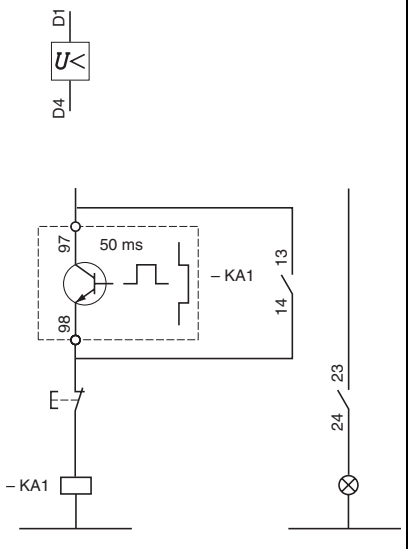

GV7AS•••

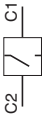

GV7AD111, AD112

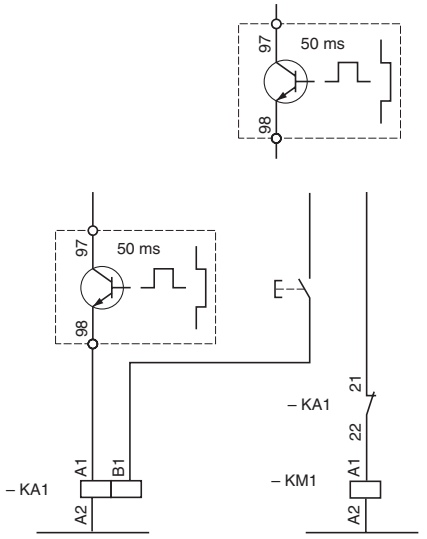

© 2009 Schneider Electric
All Rights Reserved

GV7AC03

Spreaders

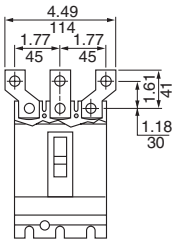

Cabling **Smooth Terminals** **Connectors**

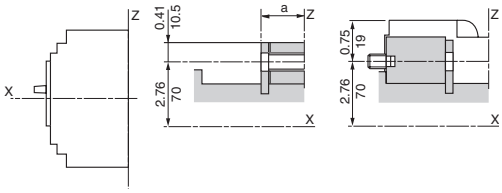

	a (in/mm)
GV7R •	0.77/19.5
GV7R • 220	0.85/21.5

GV7AP03, GV7A04

Direct Rotary Handle

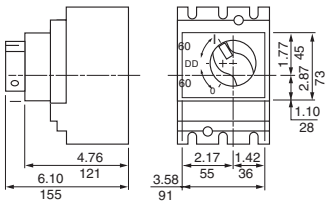

Flush Mounting

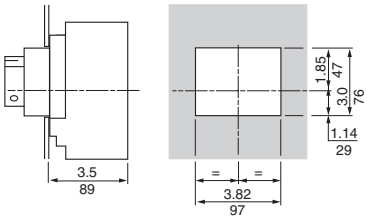

© 2009 Schneider Electric
All Rights Reserved

GV7AP03 or GV7AP04, GV7AP05

Direct Rotary Handle	Front Fuse Center	Enclosure viewed from top

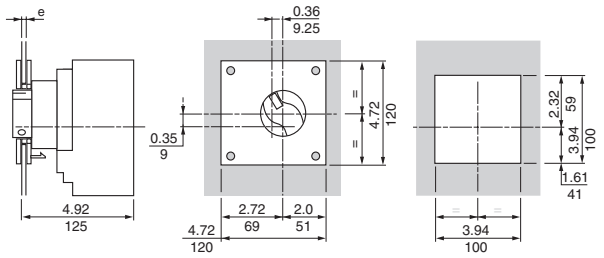

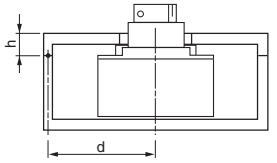

Door cutouts require a minimum distance between the center of the manual motor protector and the door hinge point (h) of d > / = 3.94 in (100 mm) + (h x 5)

GV7AP01, GV7AP02

Extended Rotary Handle

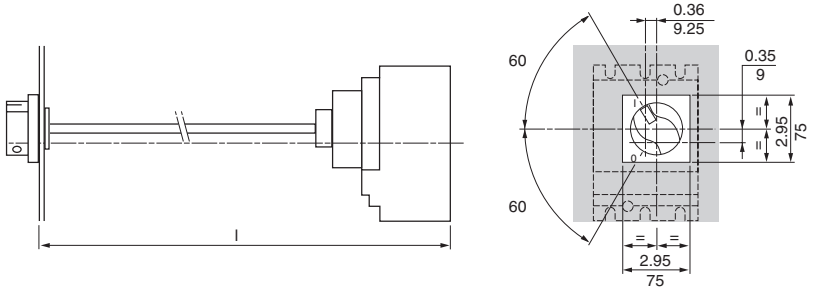

Note: l: 7.28" (185 mm) minimum, 23.62" (600 mm) maximum. The shaft of the extended rotary handle GV7AP01 or GV7AP02 must be cut to length: l - 4.96" (126 mm)

© 2009 Schneider Electric
All Rights Reserved