DO NOT SCALE THIS DRAWING

NOTES:

1. BRASS BODY, NICKEL PLATED.
2. TEFLON INSULATOR.
3. GOLD PLATED, PHOSPHOR BRONZE CONTACT, .000003.
4. PACKAGE IN BAG #999-319.

DRAWING NUMBER	REVISIONS				
31-203-RFX	SYM	DESCRIPTION	DATE	E.C.O. NO.	APPR.
	A	OFFICIAL ENG. RELEASE TO MFG.	10/2/91	38063	OR

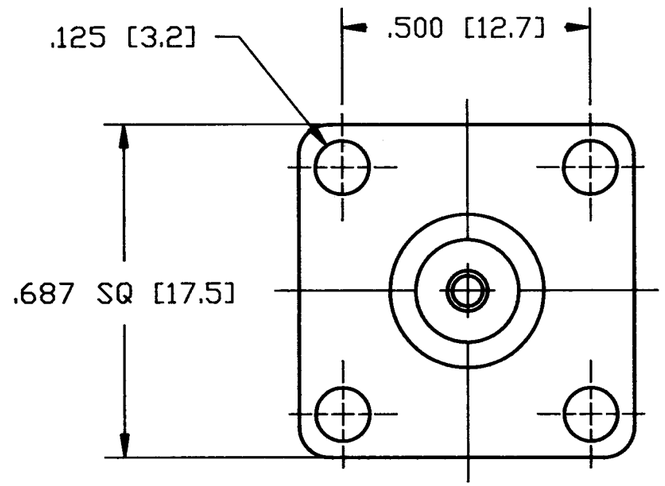

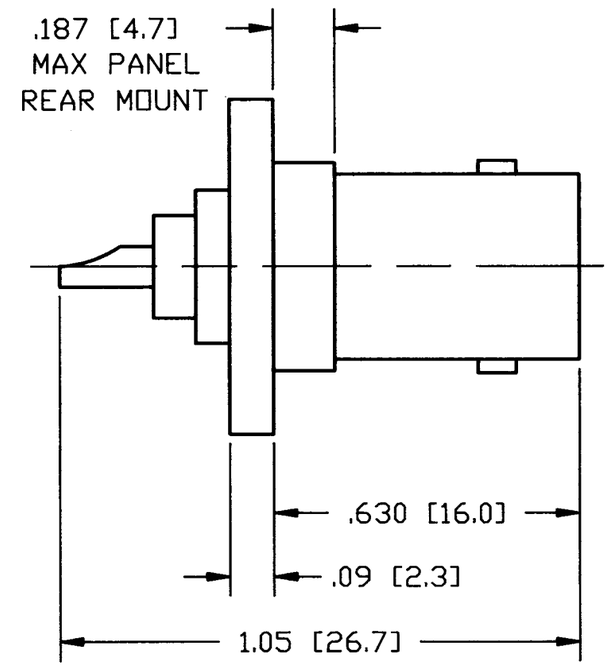

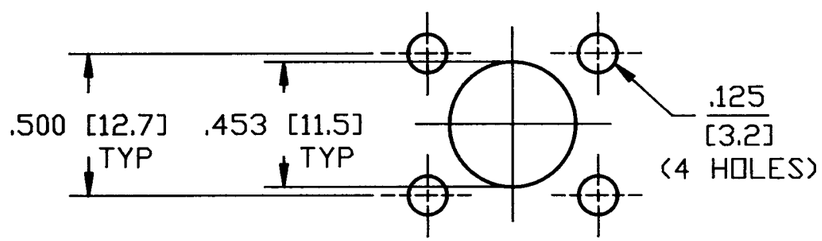

MOUNTING HOLE DETAIL

H:\DEPT611\BNC\031\ASSY\203RFX ENGLISH [METRIC]

PART NO.	QUAN	UOM	ITEM LINE NO	DESCRIPTION	CODE	FINISH

LIST OF MATERIAL

REMOVE ALL BURRS, BREAK CORNERS AND SHARP EDGES .005 MAXIMUM UNLESS OTHERWISE SPECIFIED.

NOTICE — These drawings, specifications, or other data (1) are, and remain the property of Amphenol Corp. (2) must be returned upon request; and (3) are confidential and are not to be disclosed to any person other than those to whom they are given by Amphenol Corp. The furnishing of these drawings, specifications, or other data by Amphenol Corp., or by any other person to anyone for any purpose is not to be regarded by implication or otherwise as in any manner licensing, granting rights or permitting such holder or any other person to manufacture, use or sell any product, process or design, patented or otherwise, that may in any way be related to or disclosed by said drawings, specifications or other data.

NEXT ASSY	USED ON

MATERIAL

SPECIFICATION

FINISH

UNLESS OTHERWISE SPECIFIED DIMENSIONS ARE IN INCHES. TOLERANCES NOT OTHERWISE SPECIFIED ARE:

2 PLACE DECIMAL	3 PLACE DECIMAL	ANGLES
±.015 (0,381 mm)	±.005 (0,127 mm)	± 1°

REFERENCE DRAWING NO.
EAR 962370

		DATE
DRAWN BY	TERRI ALBERA	4-19-91
CHECKED	O.W. [signature]	9-13-91
ENGINEER	O.W. [signature]	9-13-91
QUALITY ASSURANCE	[signature]	9/19/91
MFG. ENG.	H. FREDLUND	9/19/91

TITLE
BNC PANEL
RECEPTACLE
UG290A TYPE, 50 OHM

Amphenol Corporation
RF/Microwave Operations
Danbury, Conn. U.S.A.

CODE IDENTIFICATION	DRAWING SIZE	DRAWING NO.	ISSUE
74868	B	31-203-RFX	A

SCALE NTS SHEET OF

Design Products Co. Inc. Clearprint #1020