THIS DRAWING IS UNPUBLISHED. RELEASED FOR PUBLICATION -,- .
© COPYRIGHT - BY TYCO ELECTRONICS CORPORATION. ALL RIGHTS RESERVED.

LOC	DIST
AJ	16

REVISIONS

P	LTR	DESCRIPTION	DATE	DWN	APVD
	01	REV PER ECO-06-002539.	07APR2006	GB	JH

1. USE WITH PRO-CRIMPER 354940-1.
2. SEE INSTRUCTION SHEET 408-9765.

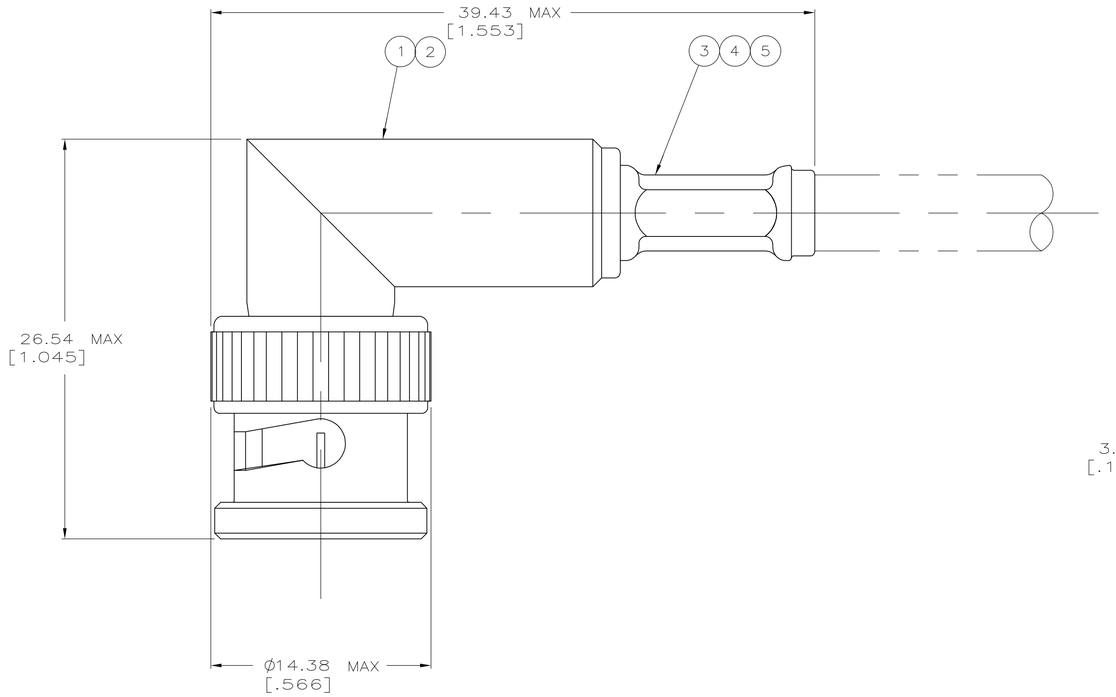

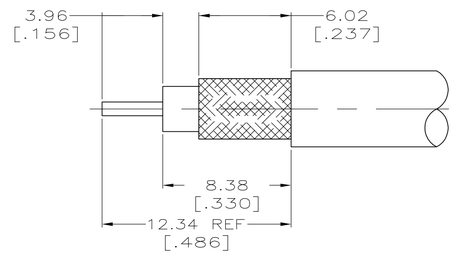

RECOMMENDED STRIP LENGTH

FOR USE WITH CABLE	CONTACT CRIMP (SQUARE)	FERRULE CRIMP (HEX)	DIE SET 1	5 TUBING, PLASTIC QTY=1	4 TUBING, METAL QTY=1	3 FERRULE QTY=1	2 CONTACT QTY=1	1 PLUG ASSY QTY=1	PART NUMBER
AT&T 735A	1.07 [.042]	4.52 [.178]	58425-2	–	–	9-413658-2	1-413746-0	413947-2	1-5413588-0
RG-59 TYPE WITH .031 DIA CENTER CONDUCTOR,BELDEN 9240,9259 & 9266	1.07 [.042]	6.48 [.255]	58425-1	–	–	9-221132-1	2-413746-0	413947-1	5413588-9
RG-179/U,179A/U,179B/U,187/U & 187A/U	1.07 [.042]	4.52 [.178]	58425-2	227194-2	1-222001-0	9-413658-0	1-413746-5	413947-2	5413588-8
AT&T KS 19224 L2	1.07 [.042]	4.52 [.178]	58425-2	227194-2	1-222001-0	9-413658-2	1-413746-5	413947-2	5413588-4
RG-59/U,59A/U & 59B/U	1.07 [.042]	6.48 [.255]	58425-1	–	–	9-221132-1	413746-5	413947-1	5413588-2

THIS DRAWING IS A CONTROLLED DOCUMENT.

DIMENSIONS: mm [INCHES]

TOLERANCES UNLESS OTHERWISE SPECIFIED:
0 PLC ± –
1 PLC ± –
2 PLC ± –
3 PLC ± 0.41 [.016]
4 PLC ± –
ANGLES ± –

MATERIAL –
FINISH –

DWN J. HAVENER 12AUG2005
CHK J. HAVENER 12AUG2005
APVD J. LIPPERT 12AUG2005

PRODUCT SPEC –
APPLICATION SPEC –
WEIGHT –

tyco Electronics
Tyco Electronics Corporation
Harrisburg, PA 17105-3608

NAME PLUG, RIGHT ANGLE, HEX CRIMP, 75 OHM,BNC

SIZE	CAGE CODE	DRAWING NO	RESTRICTED TO
A1	00779	C-5413588	–

CUSTOMER DRAWING | SCALE 5:1 | SHEET 1 OF 1 | REV 01