PRODUCT NUMBER

6 4 9 9 1 – X X X – X X X X X LF

PLATING NOTE 12

S=15μ"[0.38μm]GOLD/GXT ON CONTACT AREA 100μ"[2.54μm] PURE TIN ON TAIL

G=30μ"[0.76μm]GOLD/GXT ON CONTACT AREA 100μ"[2.54μm] PURE TIN ON TAIL

POSITIONS PER ROW 05 TO 50

STYLE	TAIL LENGTH
3	.090/2.29
4	.120/3.05

POLARIZATION NOTE 8

RETENTION R=RETENTIVE LEG NOTE 6

LEAD FREE OPTION (NOTE 9,11)

1. HOUSING MAT'L: HIGH TEMPERTURE THERMOPLASTIC. UL94V-O COLOR: NATURAL
2. PIN MATERIAL: PHOSPHOR-BRONZE
3. TO DETERMINE DIMENSION N= NUMBER OF POSITONS PER ROW EXAMPLE: 10 POS., (N-1) X .100/2.54=.900/22.87
4. 3LBS./1.36 KG MIN. RETENTION IN EITHER DIRECTION.
5. PACKAGED IN TRAYS.
6. RETENTIVE LEG: 5LB/2.3KG MAX INSERTION FORCE AND .25LB./1KG MIN RETENTION FORCE PER RETENTIVE PIN USING .062/1.57 THICK CIRCUIT BOARD AND RECOMMENDED HOLE PATTERN. RETENTIVE LOCATION AT THE DISCRETION OF THE MANUFACTURER. RETENTION IS TWO PINS PER PART ADJACENT TO ONE ANOTHER. OMIT FROM PRODUCT NUMBER IF THIS FEATURE IS NOT APPLICABLE.
7. UNDER PLATING 50μ"/1.27μm Ni.
8. FOR POLARIZATION SPECIFY POSITION NUMBER (e.i.. A03=ROW A POS. 3) TO OMIT PIN IF FEATURE IS NOT APPLICABLE, REMOVE FROM PRODUCT NUMBER.
9. ADD "LF" SUFFIX AT THE END OF PART NUMBER FOR LEAD FREE OPTION.
10. THE HOUSING WILL WITHSTAND EXPOSURE TO 260°C PEAK TEMPERATURE FOR 15 SECONDS IN A WAVE SOLDER APPLICATION WITH A 1.5mm MINIMUM THICK CIRCUIT BOARD. SEE APPLICATION NOTES/PROCEDURES IF THEY ARE AVAILABLE.
11. IF "LF" P/N THE PRODUCT MEETS EUROPEAN UNION DIRECTIVES AND OTHER COUNTRY REGULATION AS DESCRIBED IN GS-22-008.
12. PLATING OPTIONS: MAY BE EITHER GOLD OR GXT PLATED AT MANUFACTURER'S OPTION.

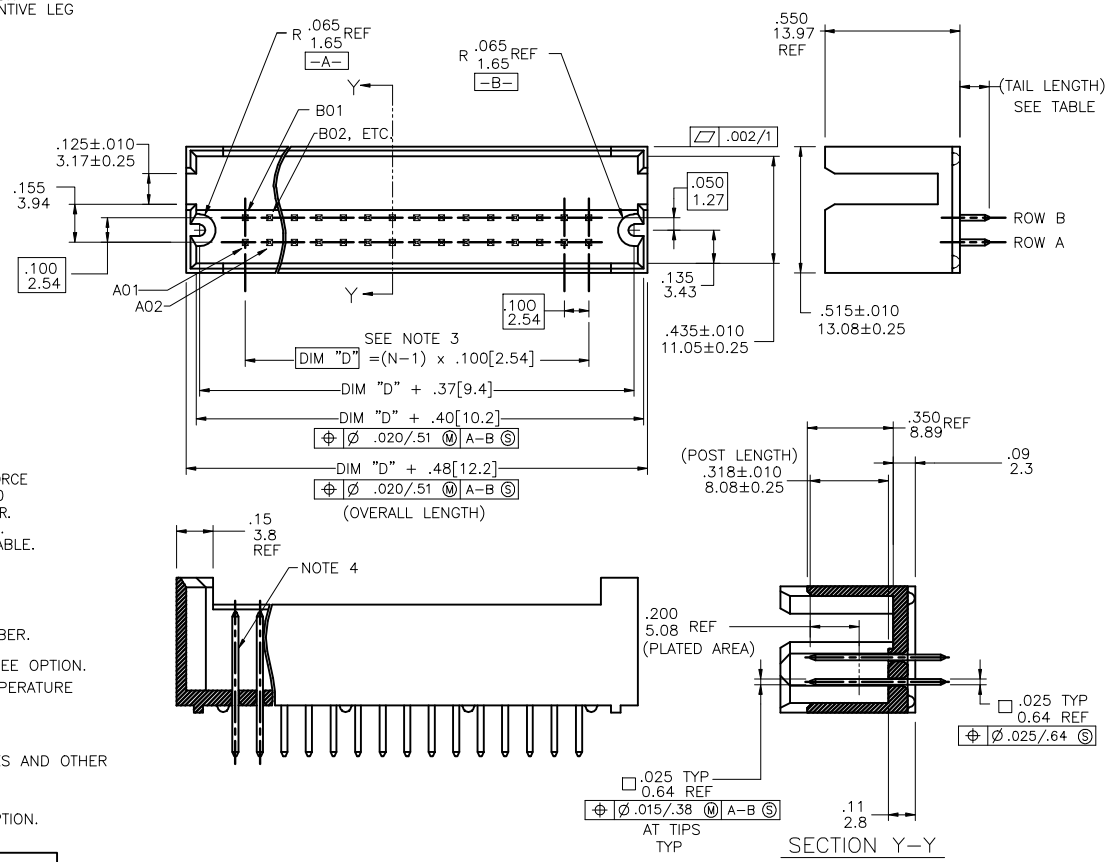

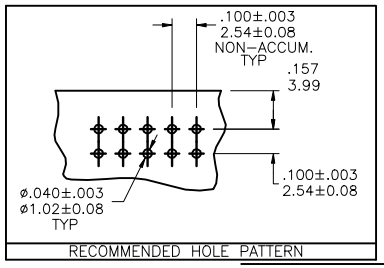

RECOMMENDED HOLE PATTERN

mat'l. code				surface	tolerance	projection	product family
NOTES 1 & 2				ISO 1302	ISO 406 ISO 1101		HEADER
ltr	ecn no	dr	date	tolerances unless otherwise specified			title
A	V92814	DAI	8/24/99	angles	linear	INCH/MM	.100/2.54cc GUIDE PIN (SLOTTED)
B	V11526	DAI	5/21/01		.XX±.01/.X±0.3		SHROUDED VERTICAL HEADER
C	V212895	TAB	1/09/03	0°±2°	.XXX±.005/.XX±0.13	scale 1:1	
D	M05-0089	MHT	5/20/05	dr D. INGRAM	.XXXX±.0020/.XXX±0.051		dwg no 64991 sheet 1 of 1 size A3
E	M07-0116	AGS	2/19/07	engr H. SUNDY	6/02/99		
F	M09-0059	MHT	4/16/09	chr H. SUNDY	7/21/99		
G	M09-0154	MHT	9/10/09	appd H. SUNDY	7/21/99		type Product Customer Drawing
sheet index	revision	G					
	sheet	1					

form: A3

Copyright FCI

FCIconnect.com

PDM: Rev:G STATUS: Released Printed: Oct 13, 2010

PRODUCT NUMBER

6 4 9 9 2 - X X X - X X X X X LF

- PLATING NOTE 12
  - S= 15μ"[0.38μm]GOLD/GXT ON CONTACT AREA 100μ"[2.54μm]PURE TIN ON TAIL
  - G= 30μ"[0.76μm]GOLD/GXT ON CONTACT AREA 100μ"[2.54μm]PURE TIN ON TAIL
- POSITIONS PER ROW 13 POS.
- TAIL LENGTH 5= .125/3.18
- POLARIZATION NOTE 8
- RETENTION R= RETENTION LEG NOTE 6
- LEAD FREE OPTION NOTE 9,11

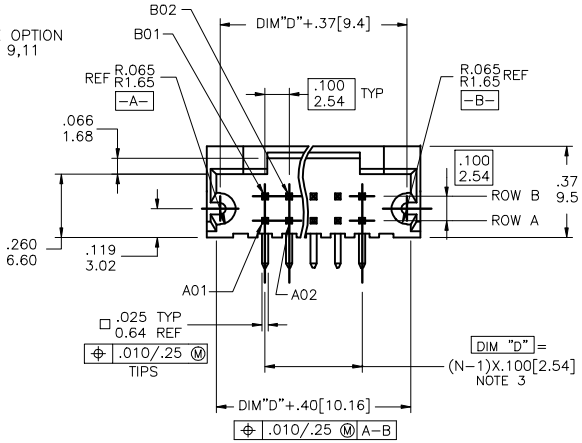

NOTES:

1. HOUSING MAT'L: HIGH TEMPERTURE THERMOPLASTIC. UL94V-0 COLOR: BLACK
2. PIN MATERIAL: PHOSPHOR-BRONZE
3. TO DETERMINE DIMENSIONS: N= NUMBER OF POSITIONS PER ROW. EXAMPLE: 13 POS., (N-1)x.100/2.54=1.200/30.48
4. 3LBS./1.36 KG MIN. RETENTION IN EITHER DIRECTION.
5. PACKAGED IN TRAYS.
6. RETENTION LEG: 5LB/2.3KG MAX INSERTION FORCE AND .25LB./1KG MIN RETENTION FORCE PER RETENTIVE PIN USING .062/1.57 THICK CIRCUIT BOARD AND RECOMMENDED HOLE PATTERN. RETENTIVE LOCATION AT THE DISCRETION OF THE MANUFACTURER. RETENTION IS TWO PINS PER PART ADJACENT TO ONE ANOTHER. IF FEATURE IS NOT APPLICABLE, REMOVE FROM PRODUCT NUMBER.
7. UNDER PLATING: .050μ"/1.2μm Ni.
8. FOR POLARIZATION SPECIFY POSITION NUMBER (i.e.. A03=ROW A POS. 3) TO OMIT PIN. IF FEATURE IS NOT APPLICABLE, REMOVE FROM PRODUCT NUMBER.
9. ADD "LF" SUFFIX AT THE END OF PART NUMBER FOR LEAD FREE OPTION.
10. THE HOUSING WILL WITHSTAND EXPOSURE TO 260°C PEAK TEMPERATURE FOR 15 SECONDS IN A WAVE SOLDER APPLICATION WITH A 1.5mm MINIMUM THICK CIRCUIT BOARD. SEE APLICATION NOTES/PROCEDURES IF THEY ARE AVAILABLE.
11. THIS PRODUCT MEETS EUROPEAN UNION DIRECTIVES AND OTHER COUNTRY REGULATION AS DESCRIBED IN GS-22-008.
12. PLATING OPTIONS: MAY BE EITHER GOLD OR GXT PLATED AT MANUFACTURER'S OPTION.

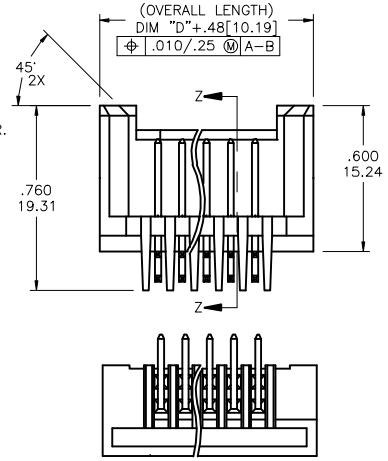

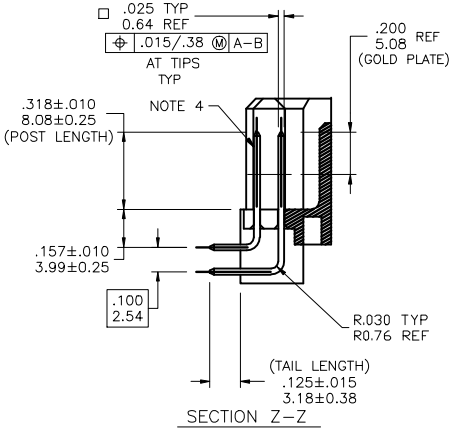

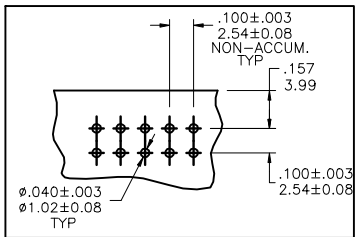

RECOMMENDED HOLE PATTERN

ltr	ecn no	dr	date
C	M05-0220	MHT	10/20/05
D	M07-0116	AGS	2/19/07
E	M07-0246	MHT	5/30/07
F	M09-0059	MHT	4/16/09
G	M09-0099	MHT	7/06/09
H	M09-0136	MHT	9/03/09
J	M09-0154	MHT	9/10/09

sheet index: revision J; sheet 1

mat'l. code

surface ISO 1302

tolerance ISO 406 ISO 1101

tolerances unless otherwise specified: angles 0°±2'; linear .XX±.01/.X±0.3; .XXX±.005/.XX±0.13; .XXXX±.0020/.XXX±0.005

projection

INCH/MM

scale 1:1

dr	O. INGRAM	6/23/99
engr	H. SUNDY	7/12/99
chr	H. SUNDY	7/12/99
appd	H. SUNDY	7/12/99

product family: HEADER

title: .100/2.54mm GUIDE PIN SHROUDED R/A HEADER

dwg no: 64992 sheet 1 of 1 size A3

type: Product Customer Drawing

form: A3

Copyright FCI

FCIconnect.com

PDM: Rev:G STATUS:Released Printed: Oct 13, 2010