THIS DRAWING IS UNPUBLISHED. RELEASED FOR PUBLICATION -,- .
© COPYRIGHT - BY TYCO ELECTRONICS CORPORATION. ALL INTERNATIONAL RIGHTS RESERVED.

LOC	DIST
AF	50

REVISIONS

P	LTR	DESCRIPTION	DATE	DWN	APVD
	Z1	REVISED PER ECR-09-000368	20JAN09	HMR	DD

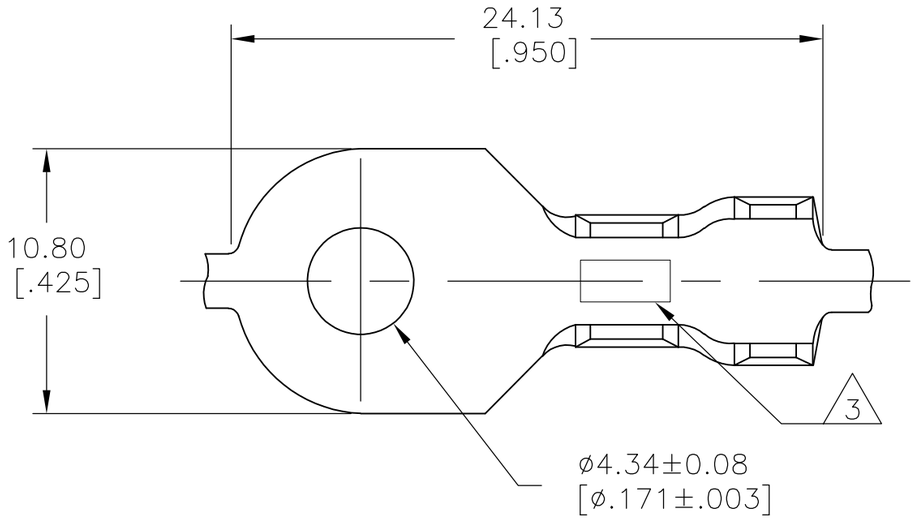

1 CONTINUOUS STRIP ON REELS

2 DIMENSIONS IN BRACKETS ARE IN INCHES

3 STAMPING: AMP FOR 40605-1
AMP* FOR 40605-2

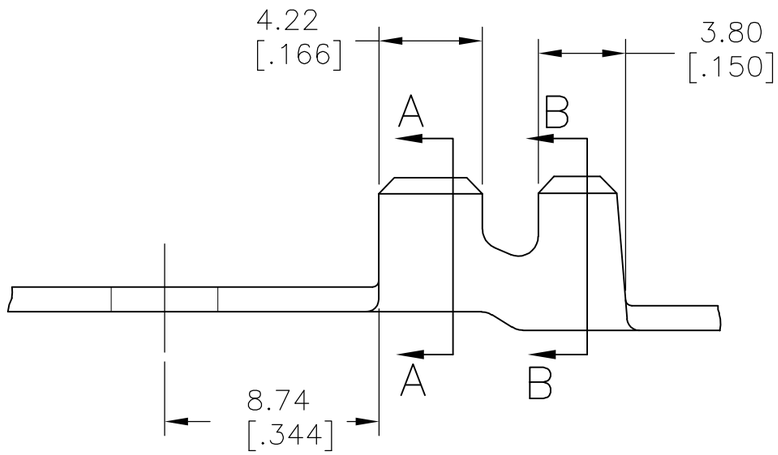

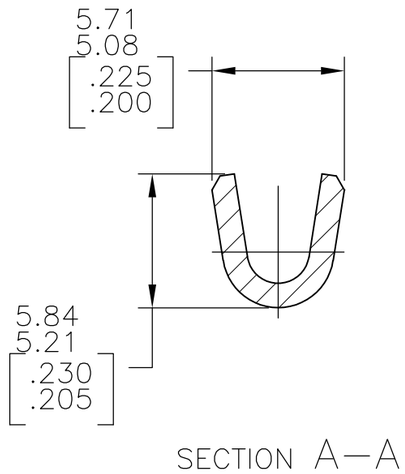

SECTION A-A

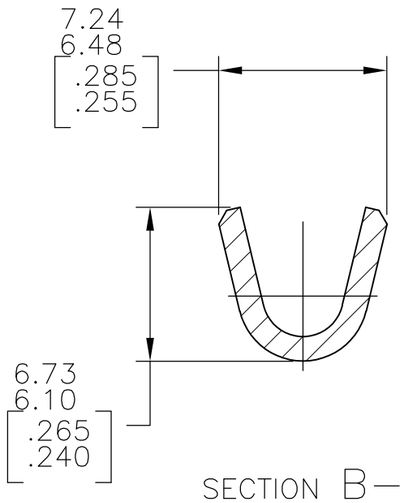

SECTION B-B

	STUD SIZE	WIRE RANGE	INSULATION RANGE	FINISH	MATERIAL	PART NO
OBSOLETE	M-4 * 8	2.0-3.0mm² [14-12]	3.30-4.57 [.130-.180]	~~TIN~~	~~1.02[.040] PHOS BRZ~~	~~40605-2~~
				TIN	1.02[.040] BRASS	40605-1
				NONE		40605

THIS DRAWING IS A CONTROLLED DOCUMENT.

DIMENSIONS: mm [INCHES]

TOLERANCES UNLESS OTHERWISE SPECIFIED:

0 PLC	± -
1 PLC	± -
2 PLC	± -
3 PLC	± .038[.015]
4 PLC	± -
ANGLES	±

MATERIAL: SEE TABLE

FINISH: SEE TABLE

DWN RAGHAVENDRA 20JAN2009
CHK DON DECKER 20JAN2009
APVD DON DECKER 20JAN2009
PRODUCT SPEC —
APPLICATION SPEC —
WEIGHT —

Tyco Electronics

Tyco Electronics Corporation
Harrisburg, PA 17105-3608

NAME: TERMINAL, RING

SIZE	CAGE CODE	DRAWING NO	RESTRICTED TO
A3	00779	C-40605	—

CUSTOMER DRAWING

SCALE	SHEET	REV
4:1	1 OF 1	Z1