THIS DRAWING IS UNPUBLISHED. RELEASED FOR PUBLICATION .19 .
© COPYRIGHT 19 BY AMP INCORPORATED. ALL RIGHTS RESERVED.

LOC	DIST
GP	00

REVISIONS

P	LTR	DESCRIPTION	DATE	DWN	APVD
	B	REVISED; EC 0UIC-0007-01	22JAN2001	JA	TW
	C	REVISED PER EC 0S15-0450-02	21JAN2003	DLD	RPM
	D	REVISED PER EC 0S15-0324-03	05DEC2003	JB	CF

1. MATERIAL: BASE - POLYESTER MOLDING COMPOUND, BLACK.
WIRE STUFFER: - POLYCARBONATE MOLDING COMPOUND, CLEAR.
TERMINAL - COPPER ALLOY, PLATED WITH 3.81µm MINIMUM THICK TIN OVER 1.27µm MINIMUM THICK NICKEL UNDERPLATE.

2. EACH WIRE ENTRY HOLE ACCEPTS ONE UNSTRIPPED SOLID COPPER 22-26 AWG WIRE WITH WIRE INSULATION DIAMETER RANGE FROM .060 THROUGH .040. OTHER WIRE SIZES AND TYPES SHALL BE SUBMITTED TO AMP ENGINEERS FOR APPLICATION APPROVAL.

3. SOLDER TABS PROVIDED FOR PERMANENT BOARD MOUNTING.

4. LOCATION OF HOLE PATTERN DETERMINED BASED ON CUSTOMER REQUIREMENTS.

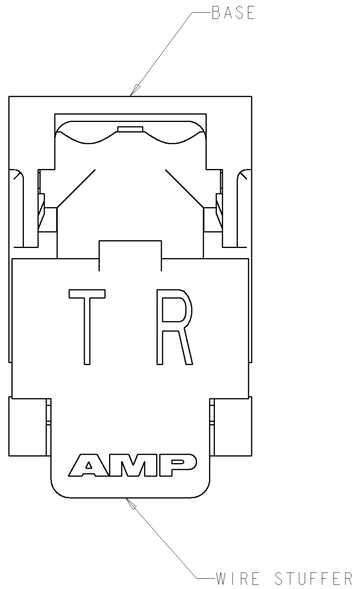

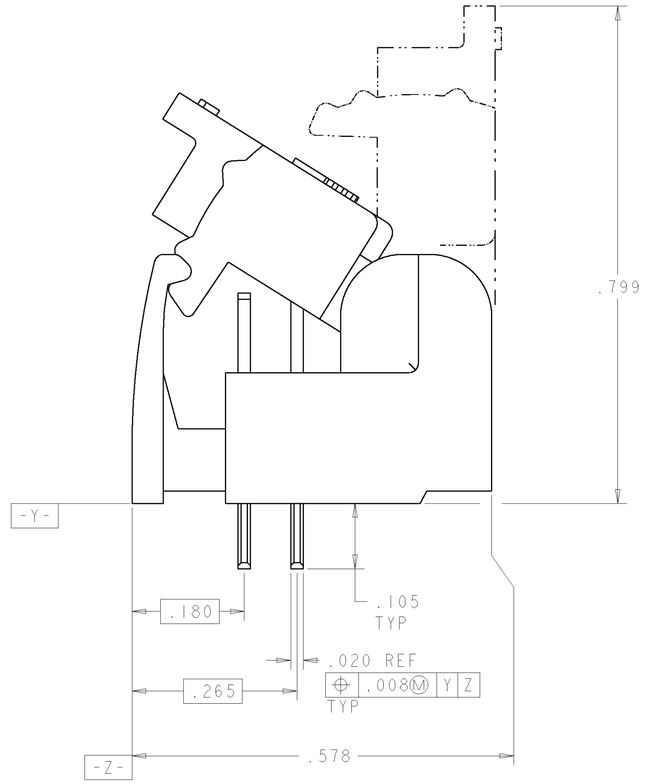

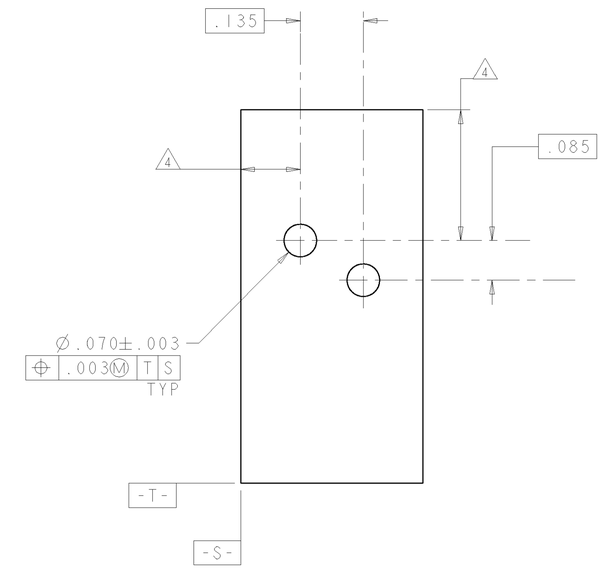

SUGGESTED PRINTED CIRCUIT BOARD MOUNTING DIMENSIONS VIEWED FROM SOLDER SIDE

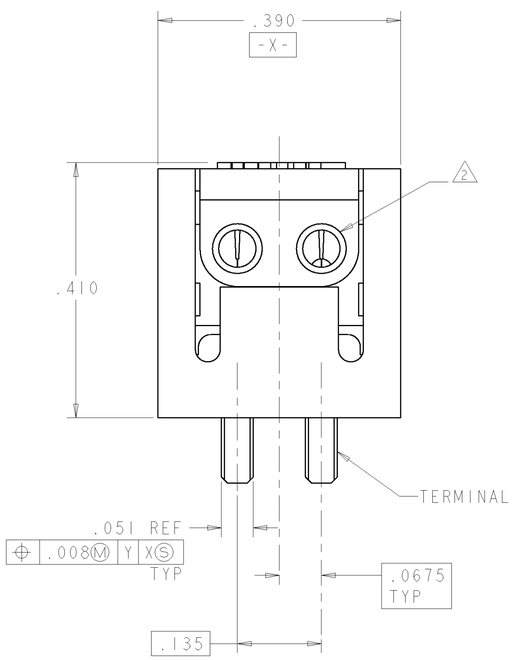

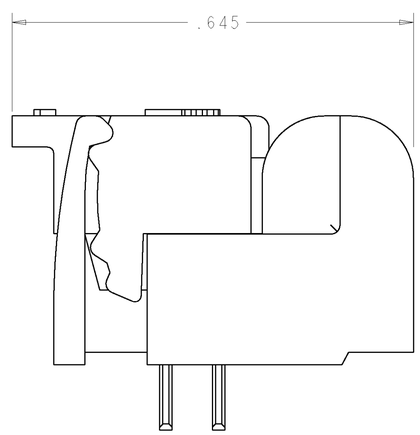

CLOSED POSITION

1339307-1

PART NUMBER

THIS DRAWING IS A CONTROLLED DOCUMENT FOR AMP INCORPORATED. IT IS SUBJECT TO CHANGE AND THE CONTROLLING ENGINEERING ORGANIZATION SHOULD BE CONTACTED FOR THE LATEST REVISION.

DIMENSIONS: INCHES

TOLERANCES UNLESS OTHERWISE SPECIFIED:
0 PLC ±-
1 PLC ±-
2 PLC ±.01
3 PLC ±.005
4 PLC ±-
ANGLES ±2°

MATERIAL 1

FINISH -

DWN K ZARBOCK 28APR00
CHK M DERSTINE 28APR00
APVD M DERSTINE 28APR00

PRODUCT SPEC -

APPLICATION SPEC -

WEIGHT -

CUSTOMER DRAWING

AMP Incorporated
Harrisburg, PA 17105-3608

NAME ASSEMBLY, SINGLE PAIR, SINGLE ENTRY, PIVOT II CONNECTOR

SIZE	CAGE CODE	DRAWING NO
A1	00779	C-1339307

SCALE 8:1 SHEET 1 OF 1 REV D

AMP 4805 REV 09MA194

Pro/ENGINEER DRAWING