THIS DRAWING IS UNPUBLISHED. RELEASED FOR PUBLICATION -,- .
© COPYRIGHT 2005 By - ALL RIGHTS RESERVED.

| LOC | DIST |
|---|---|
| GP | 00 |

REVISIONS

| P | LTR | DESCRIPTION | DATE | DWN | APVD |
|---|---|---|---|---|---|
| | B | REVISED PER ECO-14-011808 | 11AUG2014 | AP | SB |

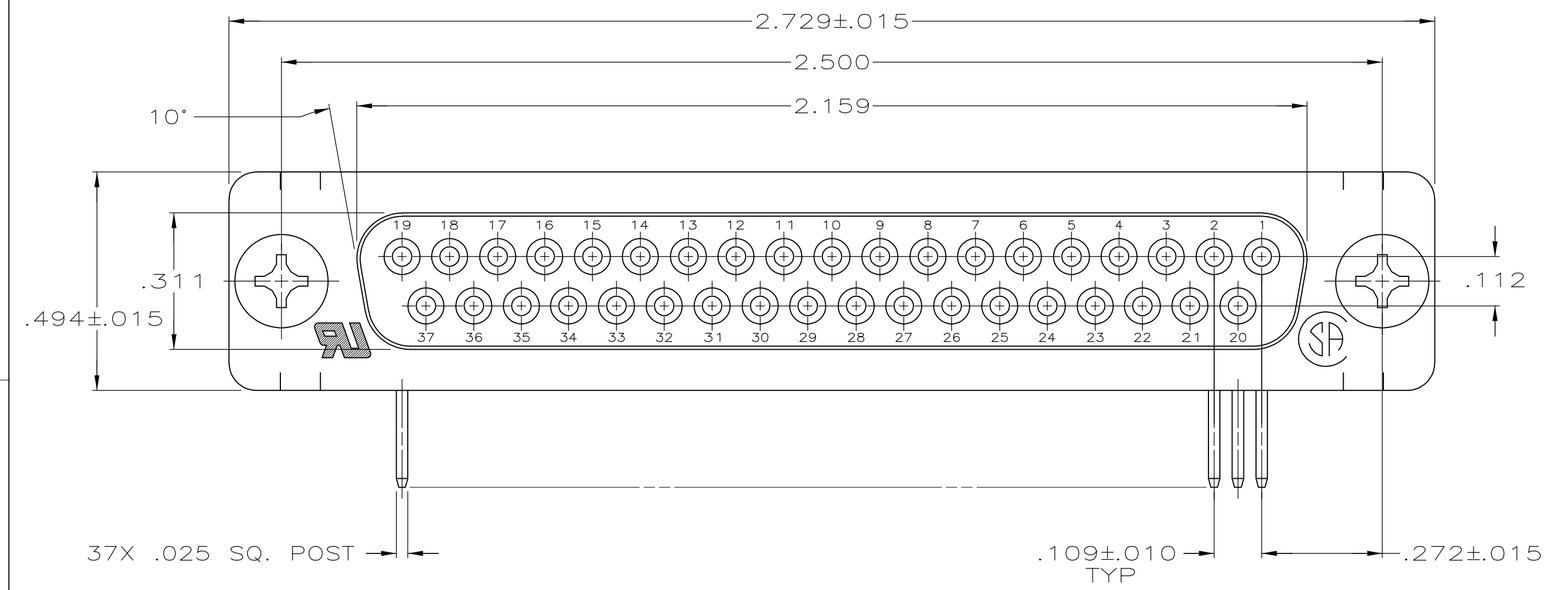


1. MOLDED PARTS: GLASS-FILLED PBT OR GLASS-FILLED NYLON, UL94V-0 RATED. COLOR: BLACK.
   SHELLS & BRACKETS: CARBON STEEL.
   CONTACTS: PHOSPHOR BRONZE.
2. SHELLS: .000200 MIN TIN OVER .000100 MIN COPPER.
   BRACKETS: .000200 MIN TIN OVER .000050 MIN COPPER.
   CONTACTS: .000030 MIN GOLD FOR A LENGTH OF .100 MIN FROM MATING END, .000100 MIN TIN ON OPPOSITE END, BOTH OVER .000050 MIN NICKEL.
   -OR-
   GOLD FLASH OVER .000030 MIN PALLADIUM NICKEL PLATED FOR A LENGTH OF .100 MIN FROM MATING END, .000100 MIN TIN ON OPPOSITE END, BOTH OVER .000050 MIN NICKEL.

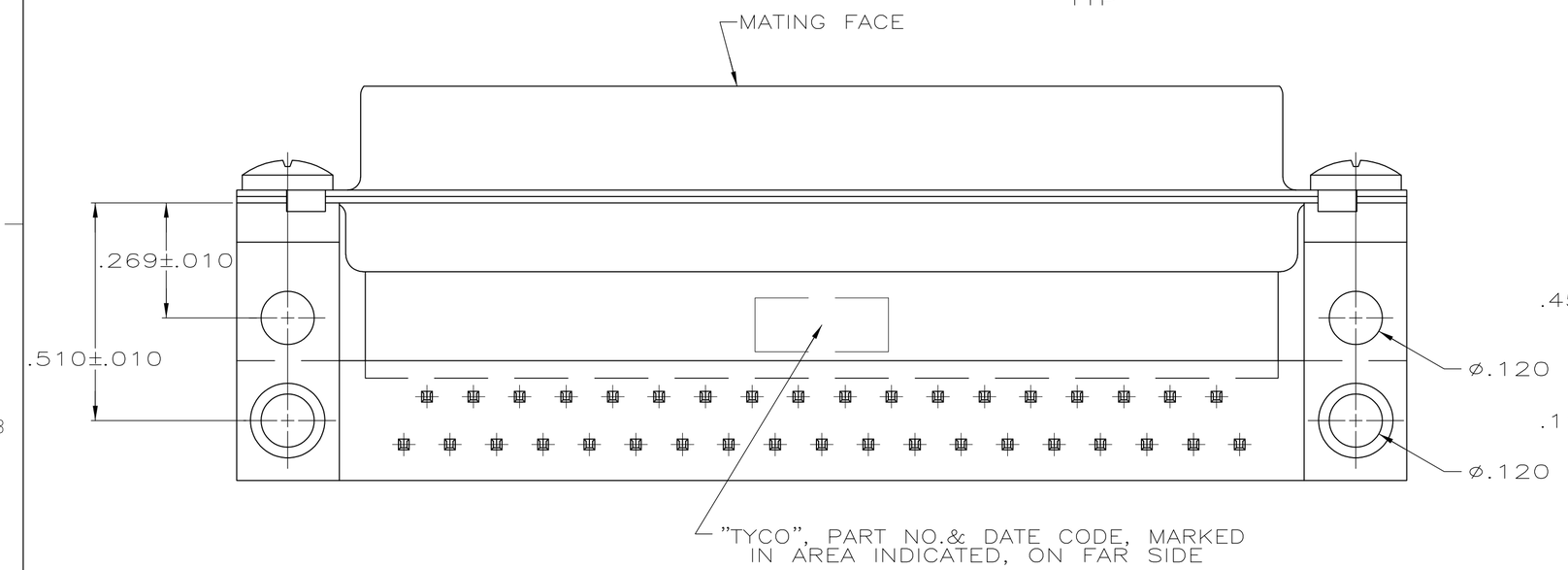


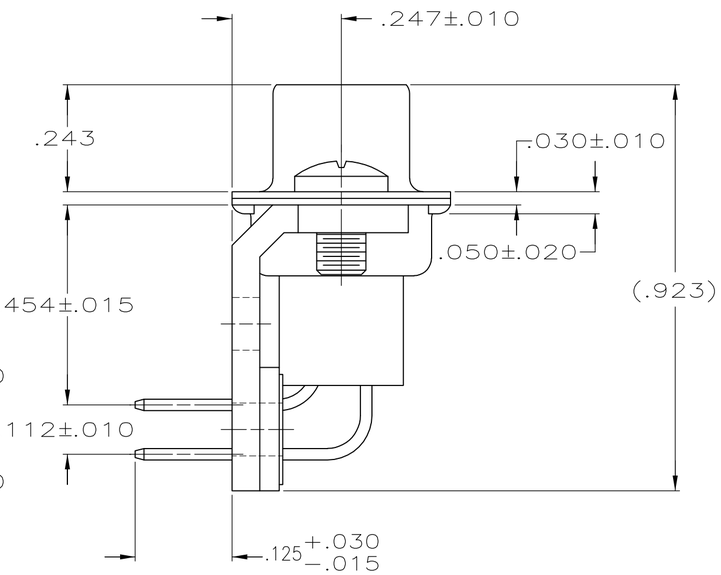


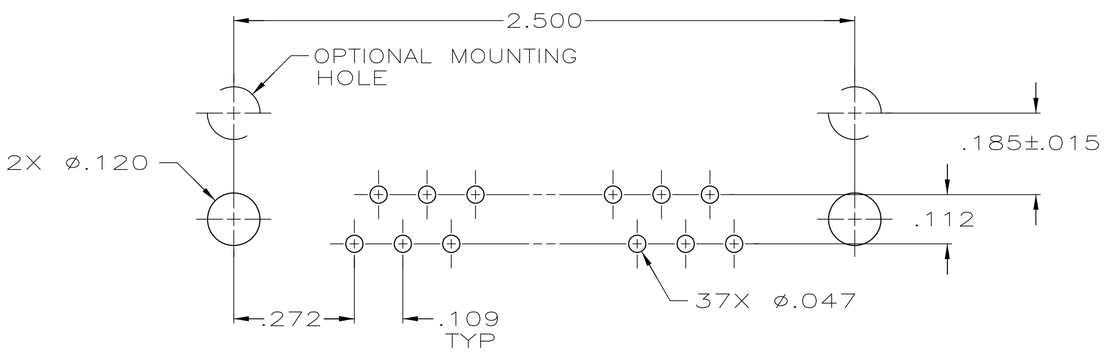


P.C. BOARD MOUNTING DIMENSIONS

5745441

5745441-4
PART NUMBER

THIS DRAWING IS A CONTROLLED DOCUMENT.

DIMENSIONS: INCHES

TOLERANCES UNLESS OTHERWISE SPECIFIED:
0 PLC ± -
1 PLC ± -
2 PLC ± -
3 PLC ± .005
4 PLC ± -
ANGLES ± 2°

MATERIAL 1
FINISH 2

| | | |
|---|---|---|
| DWN | D. HENNY | 8-31-05 |
| CHK | S. BOLASH | 8-31-05 |
| APVD | M. WALMSLEY | 8-31-05 |
| PRODUCT SPEC | 108-40025 | |
| APPLICATION SPEC | 114-40013 | |
| WEIGHT | - | |

TE Connectivity

NAME: RECEPTACLE ASSEMBLY, SIZE 4, 37 POSITION, RIGHT ANGLE, .454 SERIES, .025 SQ. POSTS, AMPLIMITE HDP

| SIZE | CAGE CODE | DRAWING NO | RESTRICTED TO |
|---|---|---|---|
| A2 | 00779 | C-5745441 | - |

CUSTOMER DRAWING | SCALE 4:1 | SHEET 1 OF 1 | REV B

1471-9 (3/11)