PRODUCT NUMBER
SEE TABLE

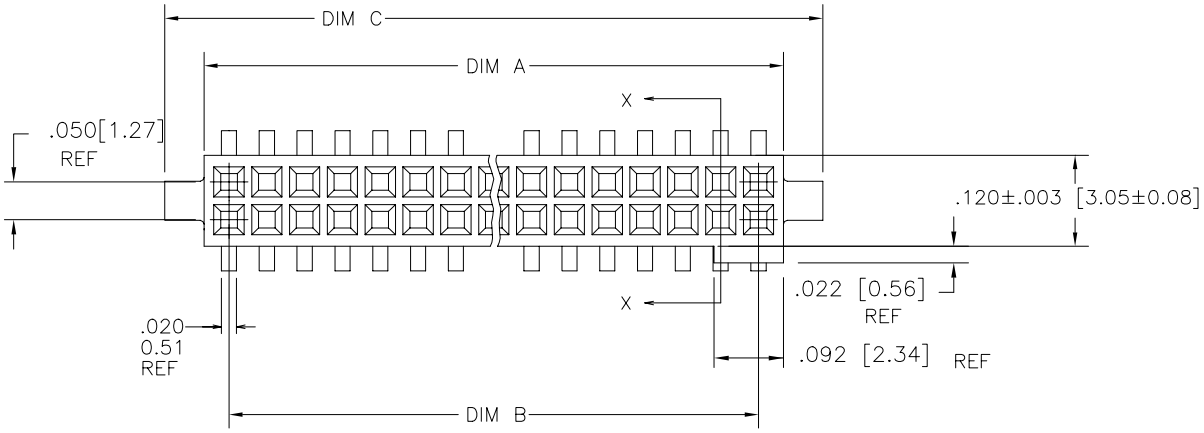

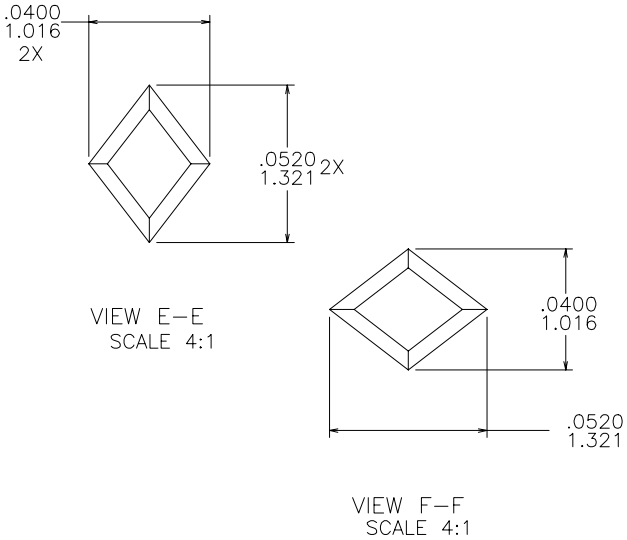

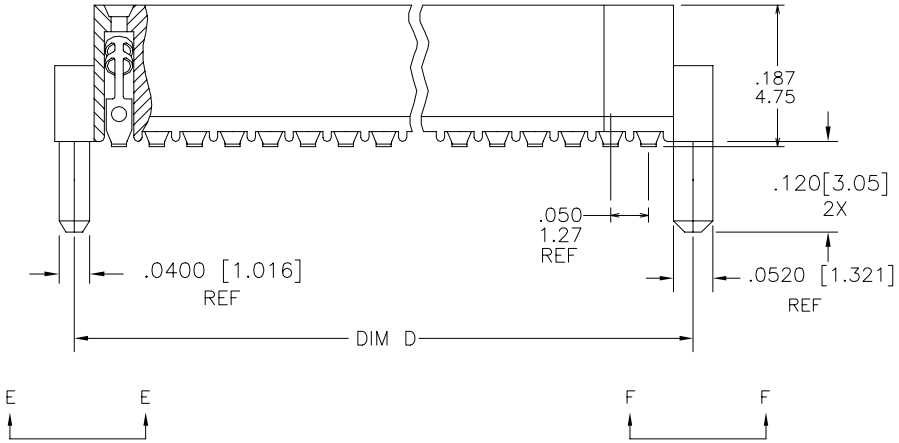

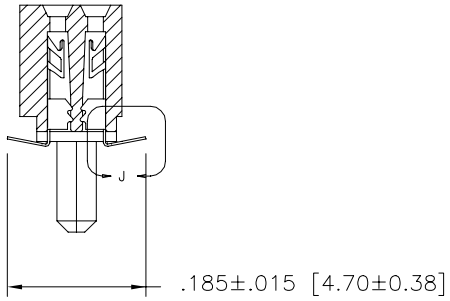

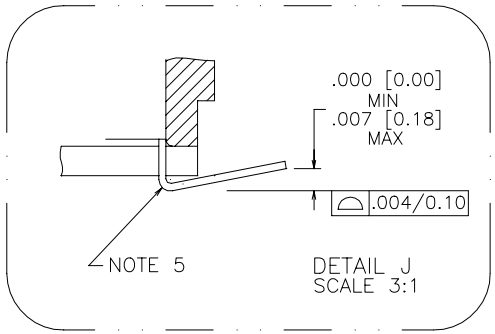

mat'l. code				surface	tolerance	projection	product family
–				ISO 1302 ✓	ISO 406 ISO 1101		RIB CAGE
ltr	ecn no	dr	date	tolerances unless otherwise specified			title
A	–	GM	2013-01-16	angles	linear: XX ±.01/.3	INCH/MM	.050/1.27cc V.C.C. SURFACE MOUNT w/POL. HOLD DOWN
–	–	–	–		XXX ±.005/.13		
–	–	–	–	0°±2°	XXXX ±.0020/.050	scale 4:1	
–	–	–	–	dr	GM SUN	2013-01-16	dwg no 10124048 sheet 1 of 3 size A3
–	–	–	–	engr	GM SUN	2013-01-16	
–	–	–	–	chr	RICK BIAN	2013-01-16	
–	–	–	–	appd	RICK BIAN	2013-01-16	type Product Customer Drawing

sheet index	revision	A	A	A
	sheet	1	2	3

FCIconnect.com
Copyright FCI
PDS: Rev :A
STATUS:Released
Printed: Feb 06, 2013
form: A3

PRODUCT NO. NOTE 8	SIZE	DIM A	DIM B	DIM C	DIM D	SPECIAL PACKAGING	TAPE WIDTH
10124048-605	2 X 5	.266/6.76	.200/5.08	.370/9.40	.3200/8.128	NOTE 7	24mm
-610	2 X 10	.516/13.11	.450/11.43	.620/15.75	.5700/14.478		
-615	2 X 15	.766/19.46	.700/17.78	.870/22.10	.8200/20.828		
-620	2 X 20	1.016/25.81	.950/24.13	1.120/28.45	1.0700/27.178	NOTE 7	44mm
-625	2 X 25	1.266/32.16	1.200/30.48	1.370/34.80	1.3200/33.528		
-630	2 X 30	1.516/38.51	1.450/36.83	1.620/41.15	1.5700/39.878		
-635	2 X 35	1.766/44.86	1.700/43.18	1.870/47.50	1.8200/46.228		
-640	2 X 40	2.016/51.21	1.950/49.53	2.120/53.85	2.0700/52.578		
-645	2 X 45	2.266/57.56	2.200/55.88	2.370/60.20	2.3200/58.928		
10124048-650	2 X 50	2.516/63.91	2.450/62.23	2.620/66.55	2.5700/65.278	NOTE 7	88mm
10124048-905	2 X 5	.266/6.76	.200/5.08	.370/9.40	.3200/8.128	NOTE 7	24mm
-910	2 X 10	.516/13.11	.450/11.43	.620/15.75	.5700/14.478		
-915	2 X 15	.766/19.46	.700/17.78	.870/22.10	.8200/20.828		
-920	2 X 20	1.016/25.81	.950/24.13	1.120/28.45	1.0700/27.178	NOTE 7	44mm
-925	2 X 25	1.266/32.16	1.200/30.48	1.370/34.80	1.3200/33.528		
-930	2 X 30	1.516/38.51	1.450/36.83	1.620/41.15	1.5700/39.878		
-935	2 X 35	1.766/44.86	1.700/43.18	1.870/47.50	1.8200/46.228		
-940	2 X 40	2.016/51.21	1.950/49.53	2.120/53.85	2.0700/52.578		
-945	2 X 45	2.266/57.56	2.200/55.88	2.370/60.20	2.3200/58.928		
10124048-950	2 X 50	2.516/63.91	2.450/62.23	2.620/66.55	2.5700/65.278	NOTE 7	88mm

XXXXXXXX – X YY LF

BASE NUMBER

LEAD FREE OPTION NOTE 8

No. POSITION

PLATING NUMBER NOTE 3

NOTES :

1. HOUSING MATERIAL : GLASS FILLED THERMOPLASTIC FLAME RETARDANT PER UL 94-0 COLOR : NATURAL
2. TERMINAL MATERIAL : BeCu
3. TERMINAL PLATING :
   -6XXLF 30u" MIN GOLD OVER Ni ON CONTACT ZONES. GOLD FLASH OVER Ni ON OTHERWISE ALL ZONES.
   -9XXLF 60u" MIN GOLD OVER Ni ON CONTACT ZONES. GOLD FLASH OVER Ni ON OTHERWISE ALL ZONES.
4. APPLICATION INFORMATION :
   A. RECOMMENDED MOUNTING PAD PATTERN IS SHOWN IN FIGURE "A".
   B. MATING PINS TO BE .0176/0.447 TO .0181/0.459 THICK.
   C. MATING PIN TIPS TO BE IN TRUE POSITION TO MATING GRID WITHIN .008/0.20 DIA.
   D. SUGGESTED MATING PIN LENGTH .130/3.30 ±.010/0.25.
5. LEAD TIPS TO BE ABOVE HEEL,UP TO .007/0.18 MAX. COPLANARITY TO BE MEASURED AT LOWEST POINT (HEEL).
6. ADD "CT" TO END OF DASH NUMBER FOR CONNECTOR WITH VACUUM CAP IN TUBE.
7. ADD "TR" TO END OF DASH NUMBER FOR TAPE AND REEL PACKAGED WITH CAP. TOOLED ONLY FOR NOTED
8. ADD "LF" SUFFIX AT THE END OF PART NUMBER FOR LEAD FREE OPTION.
9. THIS PRODUCT MEETS EUROPEAN UNION DIRECTIVES AND OTHER COUNTRY REGULATION AS DESCRIBED IN GS-22-008.
10. THE HOUSING WILL WITHSTAND EXPOSURE TO 260° PEAK TEMPERATURE FOR 20 SECONDS IN A CONVECTION INFRA-RED OR VAPOR PHASE REFLOW OVEN. SEE APPLICATION NOTES/PROCEDURES IF THEY ARE AVAILABLE.
11. PRODUCT SPECIFICATION PER BUS-12-087.

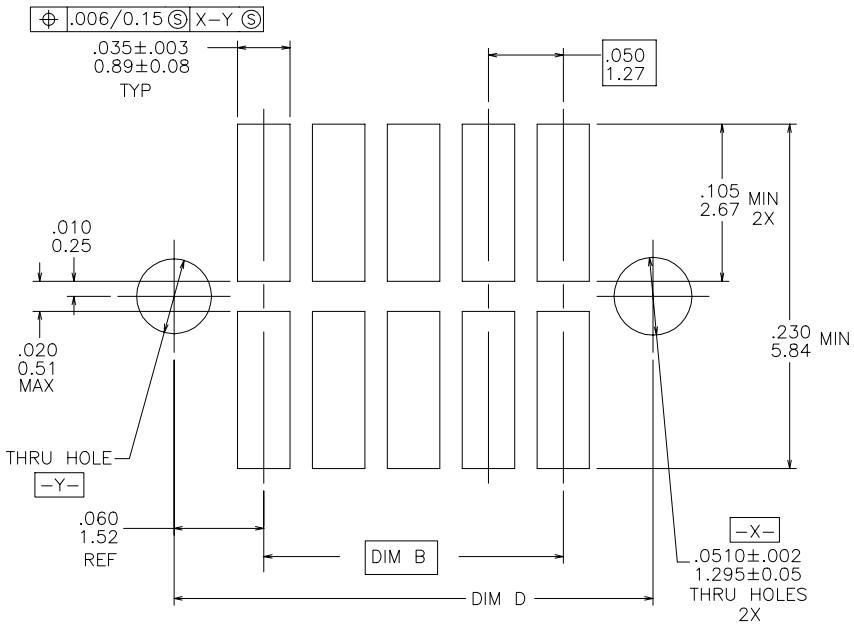

FIGURE A
RECOMMENDED
P.C.B. LAYOUT

mat'l. code –				surface ISO 1302	tolerance ISO 406 ISO 1101	projection	product family RIB CAGE
ltr	ecn no	dr	date	tolerances unless otherwise specified			title
A				angles	linear: XX ±.01/.3; XXX ±.005/.13; XXXX ±.0020/.050	INCH/MM	.050/1.27cc V.C.C. SURFACE MOUNT w/POL. HOLD DOWN
				0°±2°		scale 8:1	
				dr	GM SUN	2013-01-16	dwg no 10124048 sheet 2 of 3 size A3
				engr	GM SUN	2013-01-16	
				chr	RICK BIAN	2013-01-16	
				appd	RICK BIAN	2013-01-16	type Product Customer Drawing
sheet index	revision sheet						

form: A3

FCIconnect.com
PDS: Rev :A
STATUS:Released
Printed: Feb 06, 2013
Copyright FCI

PRODUCT NUMBER
SEE TABLE

UNREELING DIRECTION

REFERENCE ONLY

TAPE WIDTH'S 32mm AND ABOVE HAS BOTH FEED TRACKS,
BELOW 32mm HAS TOP FEED TRACK ONLY.

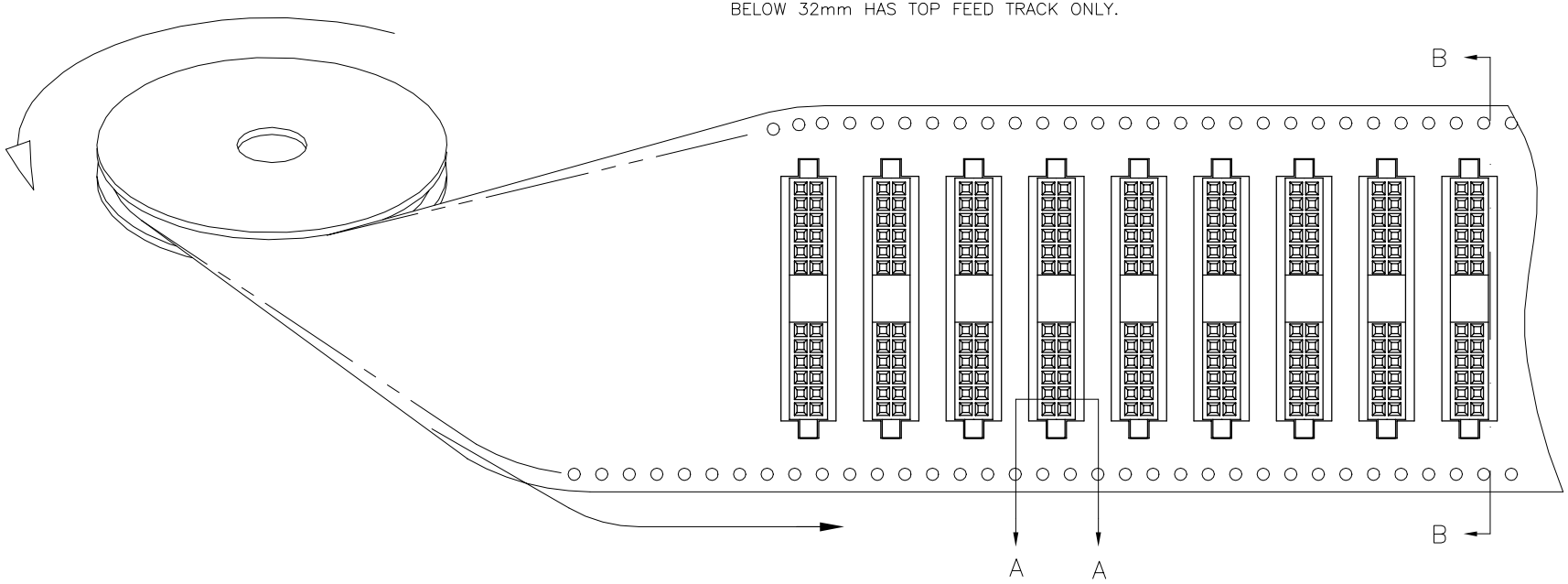

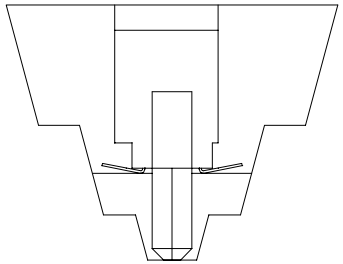

SECTION A–A

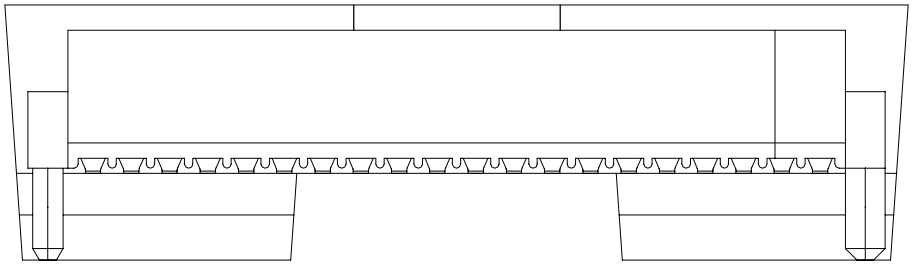

SECTION B–B

mat'l. code				surface	tolerance	projection	product family
NOTE 1 & 2				ISO 1302 ✓	ISO 406 ISO 1101		RIB CAGE
ltr	ecn no	dr	date	tolerances unless otherwise specified			title
A				angles	linear: XX ±.01/.3	INCH/MM	.050/1.27cc V.C.C. SURFACE MOUNT w/POL. HOLD DOWN
					XXX ±.005/.13		
				0°±2°	XXXX ±.0020/.050	scale 4:1	
				dr	GM SUN	2013-01-16	dwg no 10124048 sheet 3 of 3 size A3
				engr	GM SUN	2013-01-16	
				chr	RICK BIAN	2013-01-16	
				appd	RICK BIAN	2013-01-16	type Product Customer Drawing
sheet index	revision sheet						

FCIconnect.com
PDS: Rev :A
STATUS:Released
Printed: Feb 06, 2013
Copyright FCI

form: A3