THIS DRAWING IS UNPUBLISHED. RELEASED FOR PUBLICATION -,- .
© COPYRIGHT - By - ALL RIGHTS RESERVED.

REVISIONS

P	LTR	DESCRIPTION	DATE	DWN	APVD
	S5	REVISED PER ECO-16-004800	12SEP2016	NK	MZ
	T	REVISED PER ECR-16-016563	07DEC2016	RS	MZ

1 PARTS PACKAGED UNASSEMBLED.

2 CABLE CLAMPING AREA ADJUSTABLE FROM .100 TO .410 SQ IN BY REVERSING CLAMPING INSERTS. (2 INSERTS SUPPLIED)

3 CABLE CLAMPING AREA ADJUSTABLE FROM .100 TO .410 SQ IN BY CHANGING CLAMPING INSERTS. (4 INSERTS SUPPLIED, -3 ONLY)

4 .703 MAXIMUM CABLE OUTSIDE DIAMETER.

5 BULK PACKAGED KITS TO BE ORDERED IN MULTIPLES OF 100 ONLY.

6 SCREW FINISH ZINC WITH NON-HEXAVALENT CHROMATE.

7 OBSOLETE PARTS: OBSOLETE CIS STREAMLINING PER D.RENAUD/D.SINISI

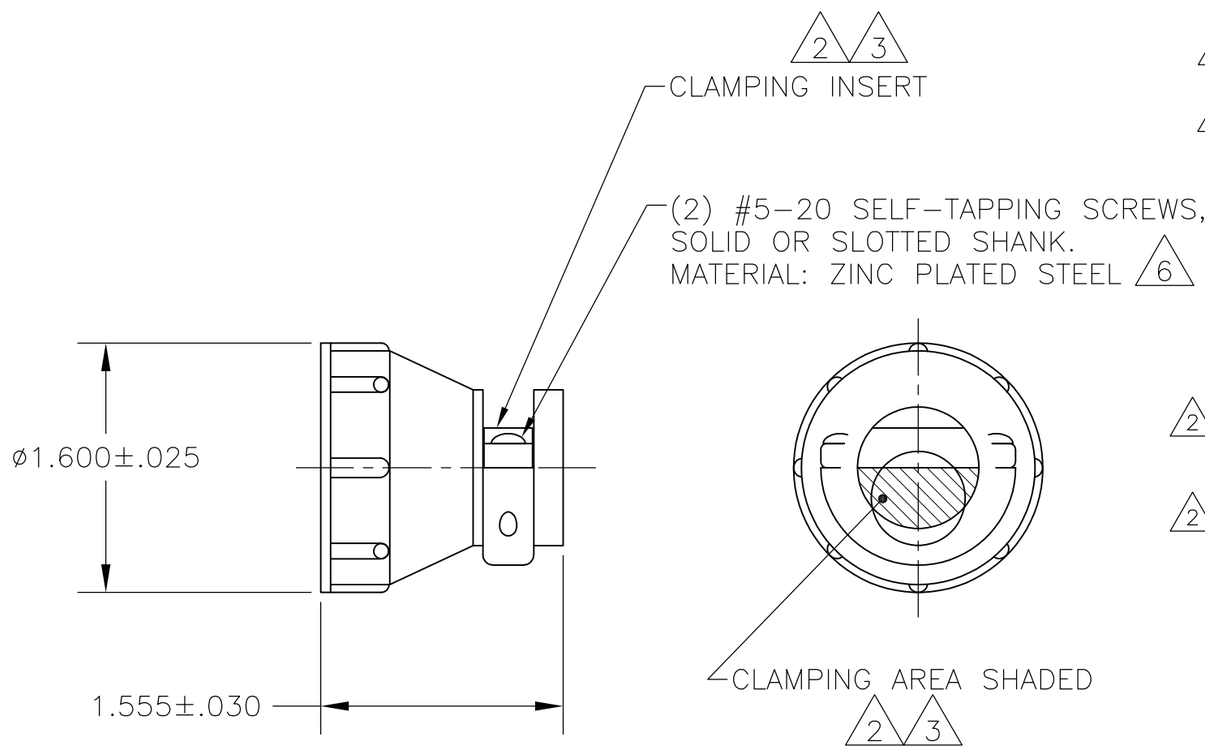

2 OBSOLETE	$.75^{+.00}_{-.05}$	INDIVIDUAL	~~1-206138-2~~
2 OBSOLETE	$.75^{+.00}_{-.05}/.62^{+.00}_{-.05}$	INDIVIDUAL	~~1-206138-1~~
2	$.62^{+.00}_{-.05}$	5 BULK	1-206138-0
2 7 OBSOLETE	$.62^{+.00}_{-.05}$	SMALL PACK	~~206138-9~~
2	$.62^{+.00}_{-.05}$	INDIVIDUAL	206138-8
2 7 SUPERSEDED BY 1-206138-1	$.75^{+.00}_{-.05}/.62^{+.00}_{-.05}$	INDIVIDUAL	~~206138-7~~
7 OBSOLETE	$.62^{+.00}_{-.05}$	SMALL PACK	~~206138-6~~
OBSOLETE	—	5 BULK	~~206138-3~~
2 SUPERSEDED BY 1-206138-0	$.62^{+.00}_{-.05}$	5 BULK	~~206138-2~~
2 SUPERSEDED BY 206138-8	$.62^{+.00}_{-.05}$	INDIVIDUAL	~~206138-1~~
	SCREW LENGTH	PACKAGING	PART NUMBER

THIS DRAWING IS A CONTROLLED DOCUMENT.

DIMENSIONS: INCHES

TOLERANCES UNLESS OTHERWISE SPECIFIED:
0 PLC ± -
1 PLC ± -
2 PLC ± -
3 PLC ± -
4 PLC ± -
ANGLES ± -

MATERIAL: THERMOPLASTIC

FINISH: -

DWN A GRAFF 4/23/91
CHK W.G.LENKER 7-22-92
APVD — -
PRODUCT SPEC 108-10024
APPLICATION SPEC —
WEIGHT —

TE Connectivity

NAME: CABLE CLAMP KIT, STANDARD, SHELL SIZE 23, CPC

SIZE	CAGE CODE	DRAWING NO	RESTRICTED TO
A3	00779	C-206138	—

CUSTOMER DRAWING | SCALE NTS | SHEET 1 OF 1 | REV T

1470-19 (1/15)