THIS DRAWING IS UNPUBLISHED. RELEASED FOR PUBLICATION 2003
© COPYRIGHT 2003 BY - ALL RIGHTS RESERVED.

LOC	DIST
1	-

REVISIONS

P	LTR	DESCRIPTION	DATE	DWN	APVD
	C7	REVISED PER ECR-15-012073	13AUG2015	NK	WW

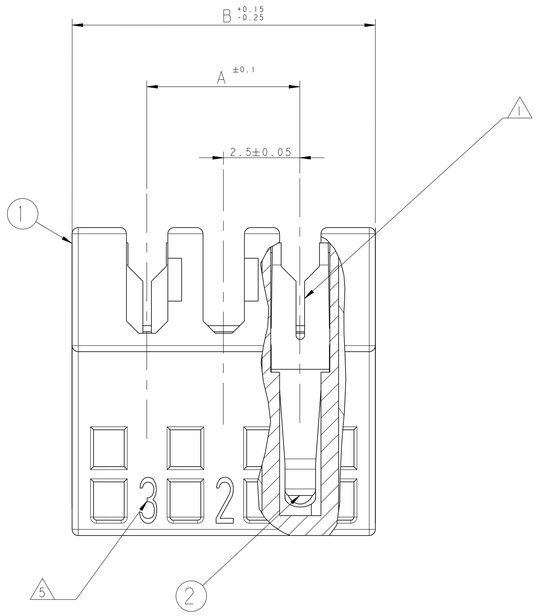

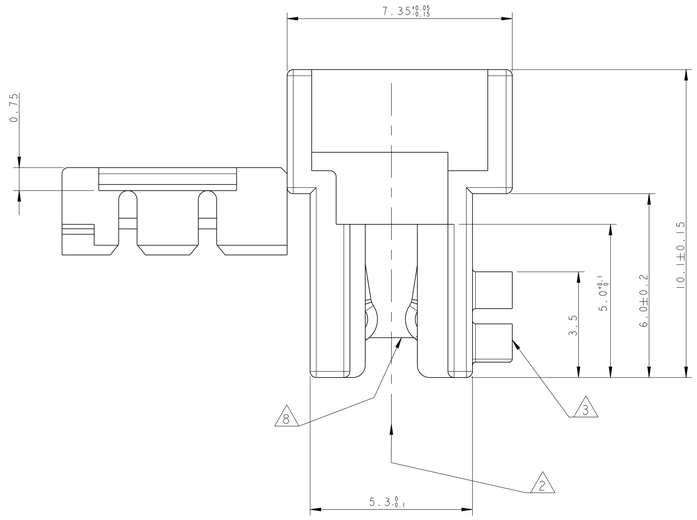

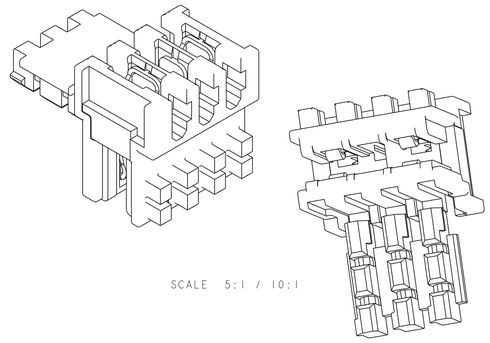

SCALE 5:1 / 10:1

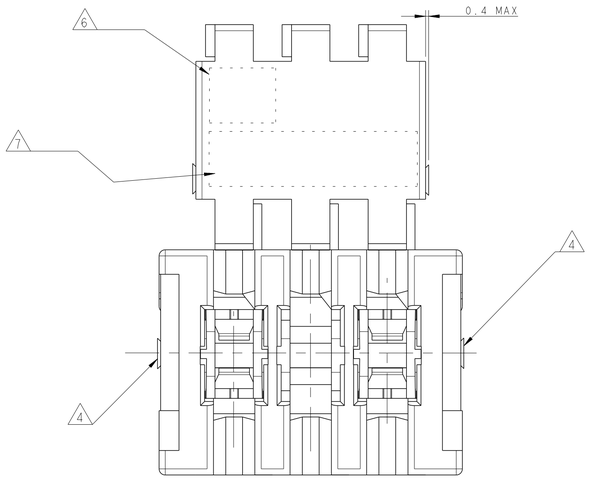

1. WIRE RANGE : STRANDED 0.22-0.35 mm^2 (INS. DIA. 1.30±0.1)
2. MATING PART: TAB HEADER P/N 829866;
   PCB FRAME P/N 964575 (PCB THK 1.5±0.14 COPPER CLADDING INCLUDED)
   SEE PRODUCT SPEC. 108-18056 FOR FRAME APPLICATION
3. KEYING RIBS TO BE REMOVED BY TERMINATION MACHINE
4. CUT OFF DIMENSION DUE TO PRODUCTION PROCESS
5. CIRCUIT No. IDENTIFICATION
6. TE TRADEMARK (OPTIONAL POSITION)
7. TAMPOGRAPHIC COLOUR CODE AREA
   (P/Ns IDENTIFICATION BEFORE CRIMPING)
8. POLARIZATION RIB BETWEEN CAVITIES,
   (SEE BELOW TYPICAL POLARIZATION CUTOFF ON PCB)

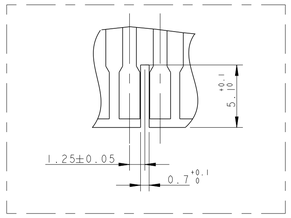

P/N 0-293207-3 AS SHOWN

MATERIAL	COLOUR CODE 7	CONTACT LOADING	POLARIZ. RIB POS. 8	HSG POS.	DIM.A	DIM.B	TE P/N	REV
10	ORANGE	SELECTIVELY 1,2,3,5,7,9,11	-	11	25.0	29.9	2-293207-1	C
	GREEN	SELECTIVELY 1,3,5,7,9,11					1-293207-1	A
9	GREEN	SELECTIVELY 1,3,5,7,9	-	9	20.0	24.9	2-293207-9	A
	ORANGE	SELECTIVELY 1,3,4,6,8,9	2/3				0-293207-9	A
10	GREEN	SELECTIVELY 1,3,5,7	-	7	15.0	19.9	0-293207-7	A
9	GREEN	FULLY LOADED	5/6	6	12.5	17.4	2-293207-6	A
	ORANGE	FULLY LOADED	-				0-293207-6	A
10	GREEN	SELECTIVELY 1,3,5	-	5	10.0	14.9	0-293207-5	B
9	GREEN	FULLY LOADED	-	3	5.0	9.9	1-293207-3	C
10	ORANGE	SELECTIVELY 1,3	-	3	5.0	9.9	0-293207-3	A

Q.TY	MATERIAL	DESCRIPTION	ITEM
SEE TABLE	PH. BRONZE, TIN PLATED	IDC RECEPTACLE CONTACT	2
	PA66 GLASS FIBER FILLED, V0 ACC. TO IEC 60335-1 REV.4 (GWT 750°C NO FLAME) COLOR WHITE OR NATURAL 0022 10	FEMALE HOUSING	1
	PA66 GLASS FIBER FILLED, V0 ACC. TO IEC 60335-1 REV.4 (GWT 750°C NO FLAME) COLOR WHITE 9	FEMALE HOUSING	

Q.TA' PER ASSEMBLATO (QTY REQ'D PER ASSY)	REVISIONE DELL'ASSEMBLATO (REVISION OF EACH ASSY NO)
1	ELENCO DEI COMPONENTI (PARTS LIST)

THIS DRAWING IS A CONTROLLED DOCUMENT.

DIMENSIONS: mm

TOLERANCES UNLESS OTHERWISE SPECIFIED:
0 PLC ±0.2
1 PLC ±0.2
2 PLC ±0.2
3 PLC ±-
4 PLC ±-
ANGLES ±1°

MATERIAL SEE TABLE -
FINISH - -

DWN R. FABRIS 22JUN2006
CHK - 10SEP2012
APVD G. TURCO 22JUN2006
PRODUCT SPEC 108-20279
APPLICATION SPEC 114-18049-1
WEIGHT -

TE Connectivity

NAME DUOPLUG 2.5 FEMALE CONN. STANDARD -

SIZE	CAGE CODE	DRAWING NO	RESTRICTED TO
A1	00779	C-293207	-

Customer Drawing SCALE 10:1 SHEET 1 OF 1 REV C7

4805 (3/11)