THIS DRAWING IS UNPUBLISHED. RELEASED FOR PUBLICATION . . - -
© COPYRIGHT - By - ALL RIGHTS RESERVED.

REVISIONS					
P	LTR	DESCRIPTION	DATE	DWN	APVD
	AP3	REVISED PER ECR-17-013047	12SEP17	J.Z	D.Z

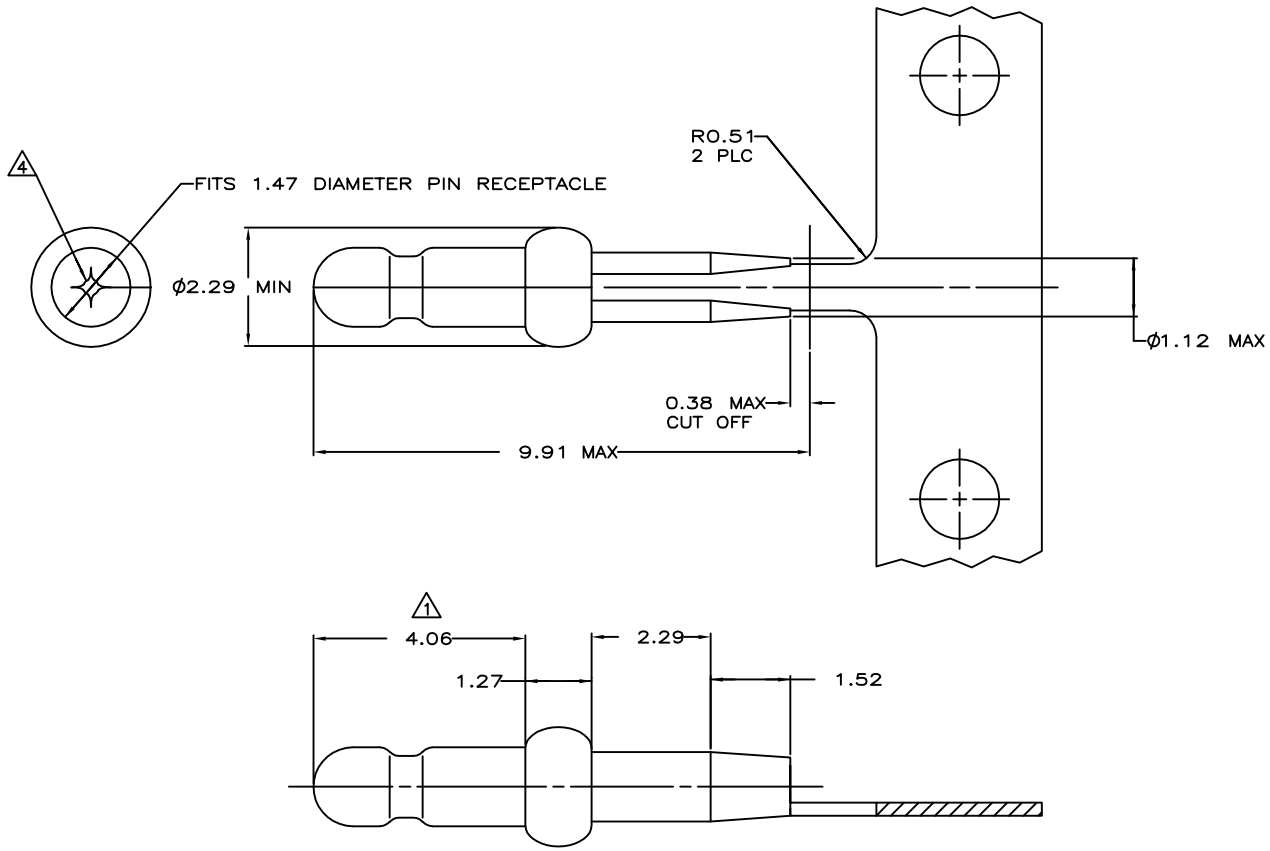

1. 0.00076 MIN GOLD PLATING IN THIS AREA WITH 0.00381 MIN MATTE TIN LEAD ON THE REMAINDER, BOTH OVER 0.00127 MIN NICKEL UNDERPLATE.
2. FITS 1.17 – 1.27 DIAMETER HOLE IN A 1.57 OR 2.36 PRINTED CIRCUIT BOARD.
3. PARTS TO COMPLY WITH AMP SOLDERABILITY SPECIFICATION 109-11-3.
4. 0.05 – 0.25 DIAMETER OPENING REQUIRED IN TIP OF PIN.
5. APPLICATOR FEED: 8.00 – 8.26
6. 0.00076 MIN GOLD PLATING IN THIS AREA WITH 0.00381 MIN MATTE TIN ON THE REMAINDER, BOTH OVER 0.00127 MIN NICKEL UNDERPLATE.

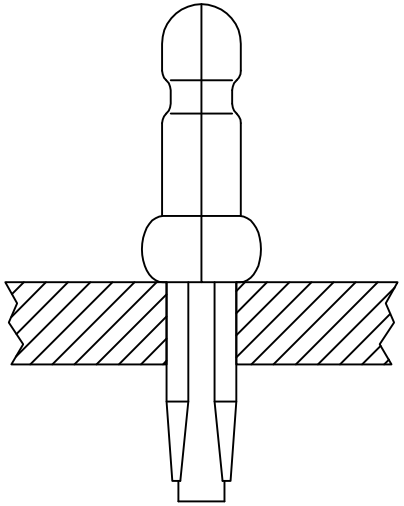

	FINISH	PART NUMBER
	6	3-60802-1
	PRE TIN	60802-2
OBSOLETE	1	60802-1

0.13	.005	1.17	.046	2.29	.090	9.91	.390
0.05	.002	1.12	.044	1.57	.062	8.26	.325
0.00381	.000150	0.51	.020	1.52	.060	8.00	.315
0.00127	.000050	0.38	.015	1.47	.058	4.06	.160
0.00076	.000030	0.25	.010	1.27	.050	2.36	.093
MM	IN	MM	IN	MM	IN	MM	IN

CONVERSION TABLE

METRIC

THIS DRAWING IS A CONTROLLED DOCUMENT.

DIMENSIONS: mm

TOLERANCES UNLESS OTHERWISE SPECIFIED:
0 PLC ± –
1 PLC ± –
2 PLC ± 0.13
3 PLC ± –
4 PLC ± –
ANGLES ± –

MATERIAL: 0.25 PH BRZ
FINISH: SEE TABLE

DWN T. BECK 7-28-97
CHK R. SWING 7-28-97
APVD A. BEDDICK 9-10-97
PRODUCT SPEC 108-1025
APPLICATION SPEC 114-1008
WEIGHT 0.000000
CUSTOMER DRAWING

TE Connectivity

NAME: PIN, .058 DIAMETER, PHOSPHER BRONZE, PRESS FIT, P.C. CONTACT

SIZE A2 | CAGE CODE 00779 | DRAWING NO C-60802 | RESTRICTED TO –
SCALE 15:1 | SHEET 1 OF 1 | REV AP3

1471-9 (1/15)