THIS DRAWING IS UNPUBLISHED.
RELEASED FOR PUBLICATION
© COPYRIGHT – By –
ALL RIGHTS RESERVED.
TODOS LOS DERECHOS RESERVADOS.

LOC	DIST
FT	0

REVISIONS

P	LTR REV	DESCRIPTION	DATE	DWN	APVD
	B	REVISED PER ECO-11-023401	01DEC11	KH	MS

NOTES:

MATERIAL:
HOUSING: THERMOPLASTIC, UL94V-0, BLACK.
TERMINAL: BRIGHT TIN PLATED, COPPER ALLOY.
M3 SCREWS: ZINC PLATED STEEL.

ELECTRICAL:
RATED CURRENT: 10A.
OPERATING VOLTAGE: 300V.
WIRE RANGE: 16-30 AWG.

MECHANICAL:
PITCH (TERMINAL SPACING): .250"
OPERATING TEMP.: 120°C MAX.

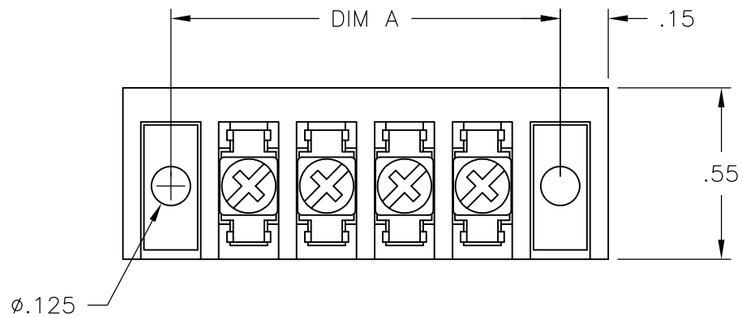

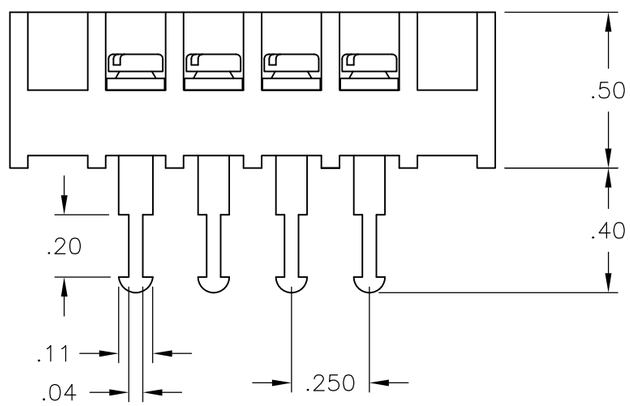

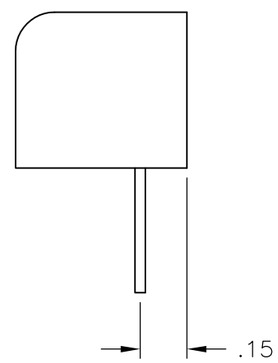

DIM "A"	NO. OF POS.	CATALOG NUMBER	PART NO.
7.25	28	3STV-28-006	2-1546687-8
7.00	27	3STV-27-006	2-1546687-7
6.75	26	3STV-26-006	2-1546687-6
6.50	25	3STV-25-006	2-1546687-5
6.25	24	3STV-24-006	2-1546687-4
6.00	23	3STV-23-006	2-1546687-3
5.75	22	3STV-22-006	2-1546687-2
5.50	21	3STV-21-006	2-1546687-1
5.25	20	3STV-20-006	6-1546119-3
5.00	19	3STV-19-006	1-1546687-9
4.75	18	3STV-18-006	1-1546687-8
4.50	17	3STV-17-006	1-1546687-7
4.25	16	3STV-16-006	1-1546687-6
4.00	15	3STV-15-006	1-1546687-5
3.75	14	3STV-14-006	1-1546687-4
3.50	13	3STV-13-006	1-1546687-3
3.25	12	3STV-12-006	6-1546119-2
3.00	11	3STV-11-006	1-1546687-1
2.75	10	3STV-10-006	6-1546119-1
2.50	9	3STV-09-006	6-1546119-0
2.25	8	3STV-08-006	5-1546119-9
2.00	7	3STV-07-006	5-1546119-8
1.75	6	3STV-06-006	5-1546119-7
1.50	5	3STV-05-006	5-1546119-6
1.25	4	3STV-04-006	5-1546119-4
1.00	3	3STV-03-006	5-1546119-3
.75	2	3STV-02-006	5-1546119-2

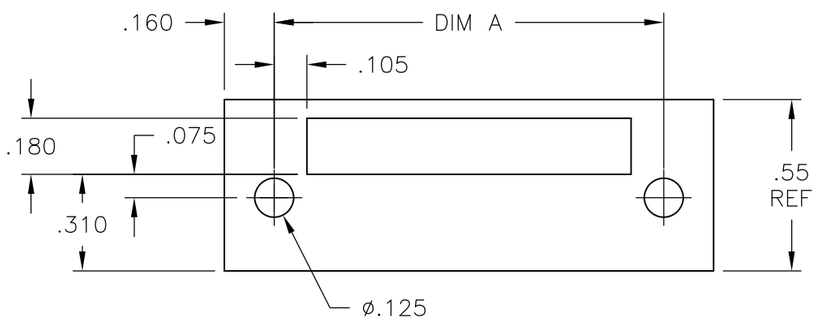

RECOMMENDED PANEL LAYOUT

THIS DRAWING IS A CONTROLLED DOCUMENT.

DIMENSIONS: MILLIMETERS / INCHES

TOLERANCES UNLESS OTHERWISE SPECIFIED:
0 PLC ± –
1 PLC ± –
2 PLC ± .02
3 PLC ± .010
4 PLC ± –
ANGLES ± –

MATERIAL –

FINISH/OBERFLAECHE/FARBE –

DWN	S SCHLEGEL	4/22/03
CHK	S YODER	4/22/03
APVD	S YODER	4/22/03
PRODUCT SPEC	—	
APPLICATION SPEC	—	
WEIGHT	APPROX. —	

TE Connectivity

3STV-XX-006 ASSEMBLY

SIZE	CAGE CODE	DRAWING NO	RESTRICTED TO
A3	00779	C-5-1546119-2	—

CUSTOMER DRAWING

SCALE NTS | SHEET 1 OF 1 | REV B

1470-19 (3/11)