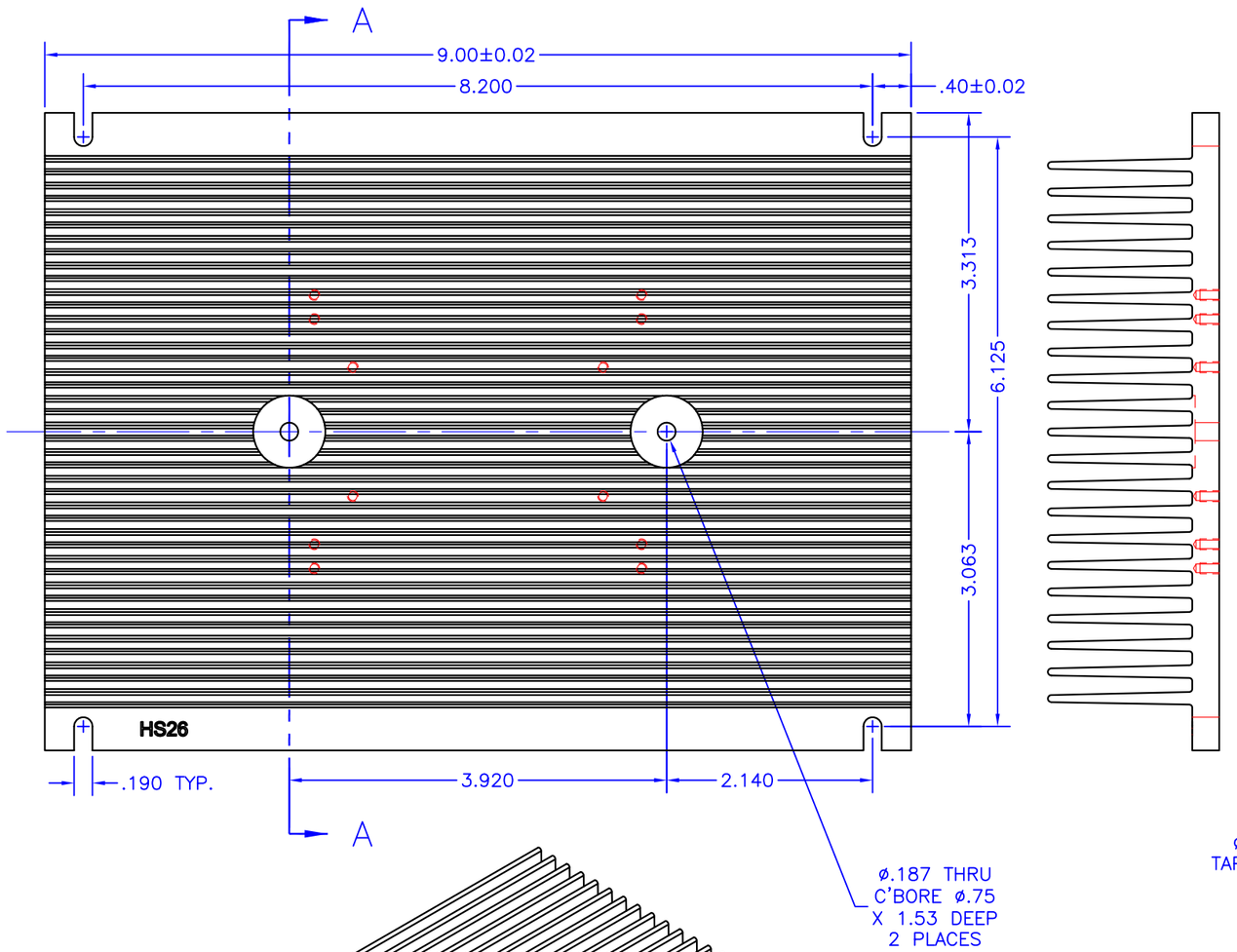

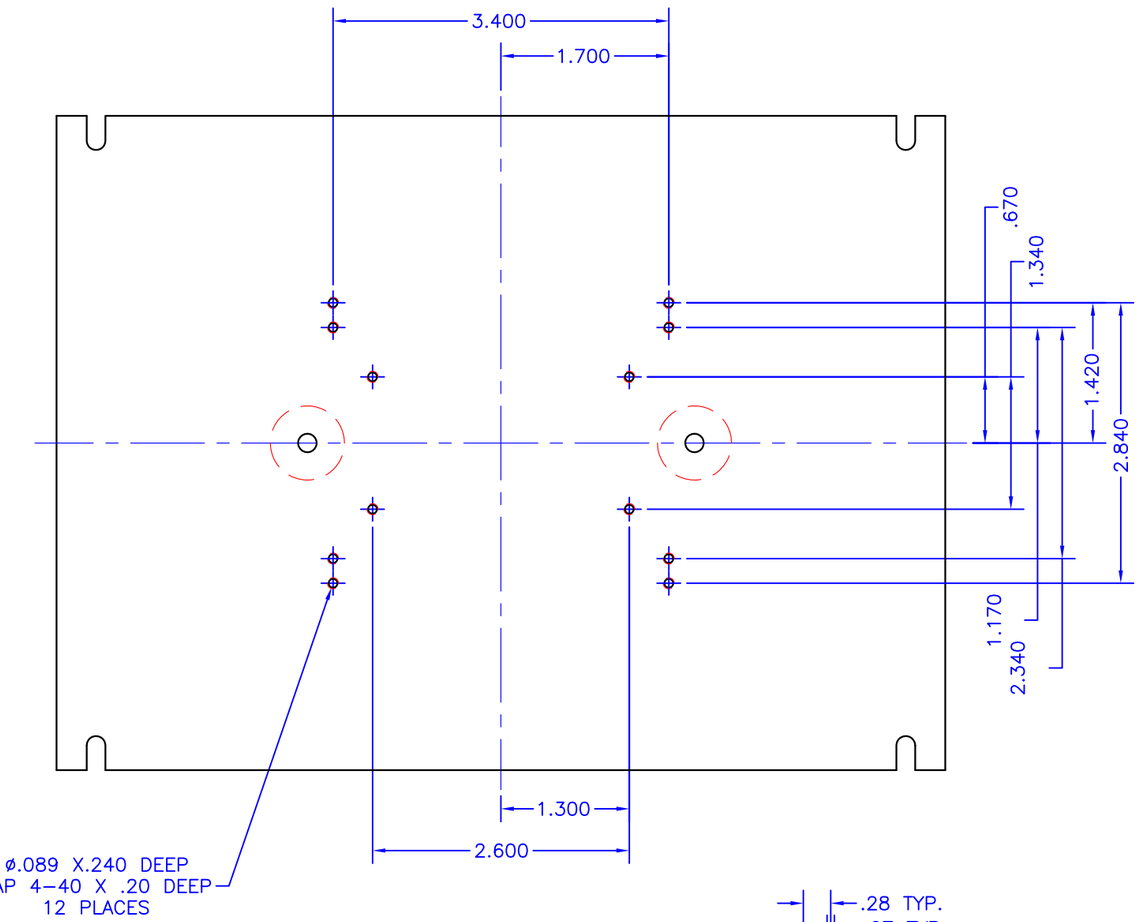

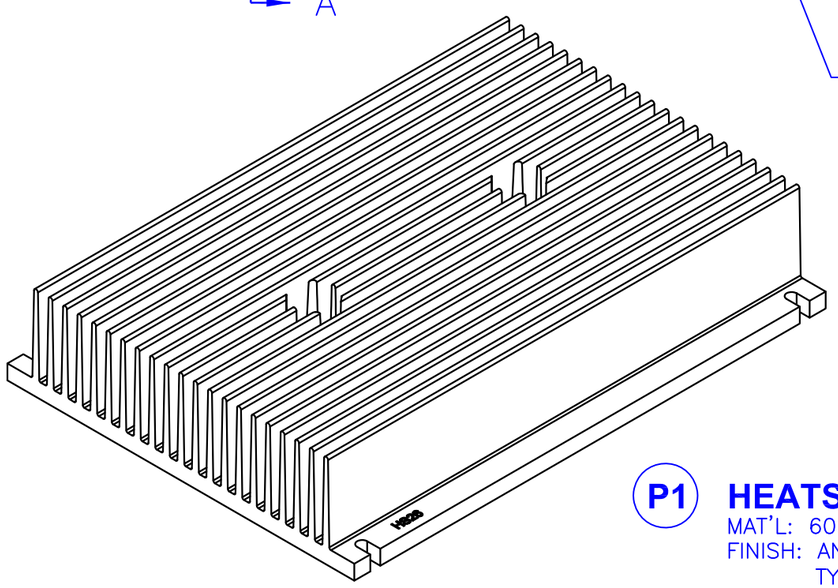

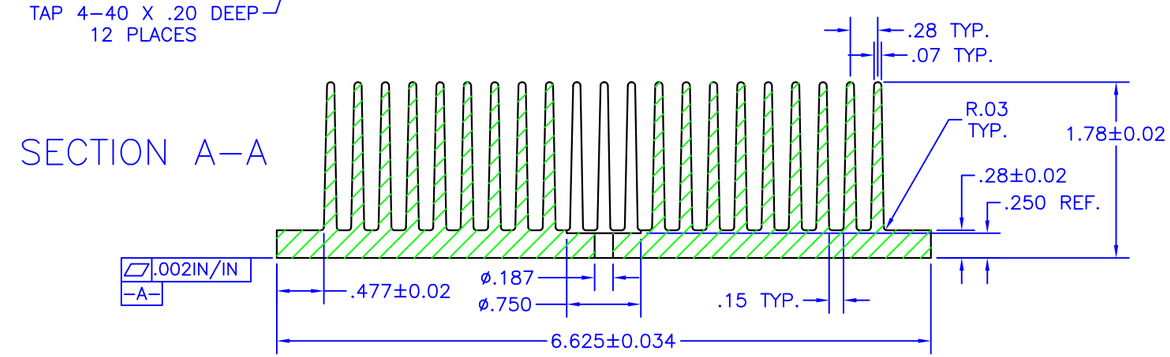

P1 **HEATSINK**

MAT'L: 6063–T5 ALUMINUM (AAVID EXTRUSION #69800)
FINISH: ANODIZE PER MIL–A–8625, TYPE II, CL 2, BLACK
TYPICAL BREAKDOWN VOLTAGE > 300V

NOTES:

1. UNLESS OTHERWISE NOTED, ALL DIMENSIONS ARE IN INCHES.
2. BREAK ALL SHARP EDGES, DE–BURR & REMOVE LOOSE CHIPS.
3. MARK WITH CONTRASTING INK AS SHOWN, IF SPECIFIED BY PURCHASE ORDER.

TOLERANCES - UNLESS OTHERWISE SPECIFIED .XX = ±.05 [.002] .XXX = ±.005 [.0002] ANG. = ±2°	APEX MICROTECHNOLOGY	TITLE: MODULAR PACKAGE HEATSINK				MODEL: HS26		
		SUBJECT: MECHANICAL DRAWING						
		ENGINEER: D-M	DRAWN BY: P.ECK	DCA: 12436	SH. 1 OF 1	FILENAME: HS26	REV: C	DATE: 14NOV12