THIS DRAWING IS UNPUBLISHED. RELEASED FOR PUBLICATION ,19 .
© COPYRIGHT 19 BY AMP INCORPORATED. ALL RIGHTS RESERVED.

LOC	DIST
AG	53

REVISIONS

P	LTR	DESCRIPTION	DATE	DWN	APVD
	G	REVISED PER 0G50-0005-99	3-25-99	LM	CF

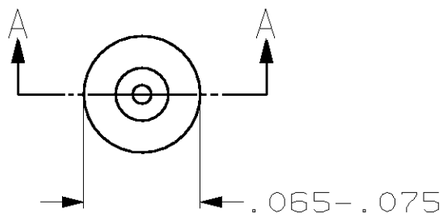

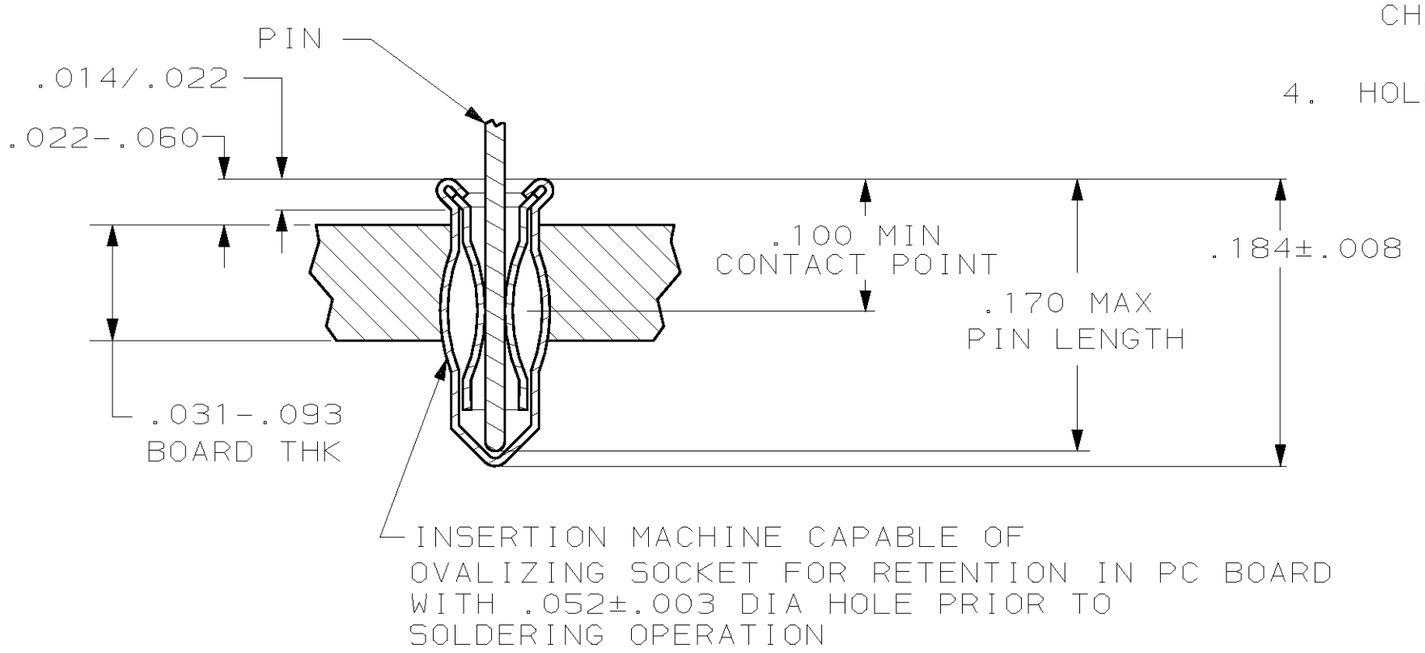

SECTION A—A

1. MATERIAL:
   EYELET - COPPER (QQ-C-576)
   SPRING - BERYLLIUM COPPER (QQ-C-533)

2. PLATING:
   TIN (MIL-T-10727) .000150 MIN THK
   GOLD (MIL-G-45204) .000030 MIN THK OVER NICKEL
   (QQ-N-290) .000011 MIN THK ON CONTACT AREA.

3. TO INSURE 1/2 OZ MIN RETENTION DO NOT EXCEED .004 DIFFERENCE IN PIN DIA WHEN CHANGING TO A SMALLER DIA PIN

4. HOLE SIZE FOR HAND INSERTION .053-.055

LENGTH	DIA (3)	SPRING	EYELET	PART NO
.100/.170	.014/.026	GOLD	TIN LEAD	645952-3
		GOLD	TIN	645952-2
		TIN		645952-1
PIN		FINISH		
NO. 2 SERIES LONG				

THIS DRAWING IS A CONTROLLED DOCUMENT.

DIMENSIONS: INCHES

TOLERANCES UNLESS OTHERWISE SPECIFIED:
0 PLC ±-
1 PLC ±-
2 PLC ±-
3 PLC ±-
4 PLC ±-
ANGLES ±-

MATERIAL –
FINISH –

DWN M. BOWERS 12-10-82
CHK P. MUTZABAUGH 6-10-85
APVD G.D. MILLER 6-10-85
PRODUCT SPEC –
APPLICATION SPEC –
WEIGHT –

AMP Incorporated
Harrisburg, PA 17105-3608

NAME MINIATURE SPRING SOCKET ASSEMBLY

SIZE	CAGE CODE	DRAWING NO	RESTRICTED TO
A3	00779	C- 645952	–

CUSTOMER DRAWING | SCALE NTS | SHEET 1 OF 1 | REV G

AMP 1470-19 REV 11JUN97

26-MAR-99 08:59:45 amp45354 /home/amp45354/99-005