THIS DRAWING IS UNPUBLISHED. RELEASED FOR PUBLICATION –,– .
© COPYRIGHT – BY TYCO ELECTRONICS CORPORATION. ALL RIGHTS RESERVED.

LOC	DIST
ES	00

REVISIONS

P	LTR	DESCRIPTION	DATE	DWN	APVD
	C	REVISED ECR–08–015066	04JUN08	C.Z	S.Y

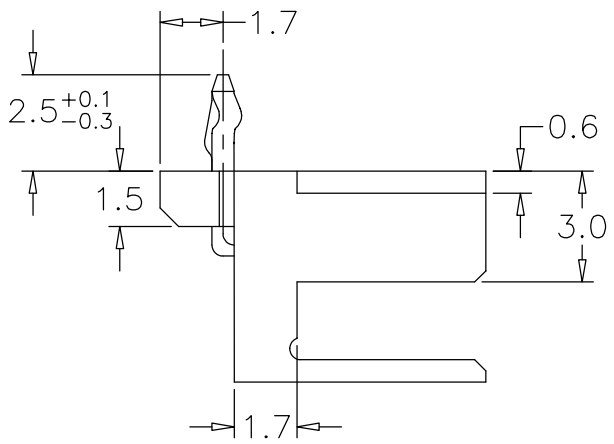

(3,5,9,10,15 POS.)

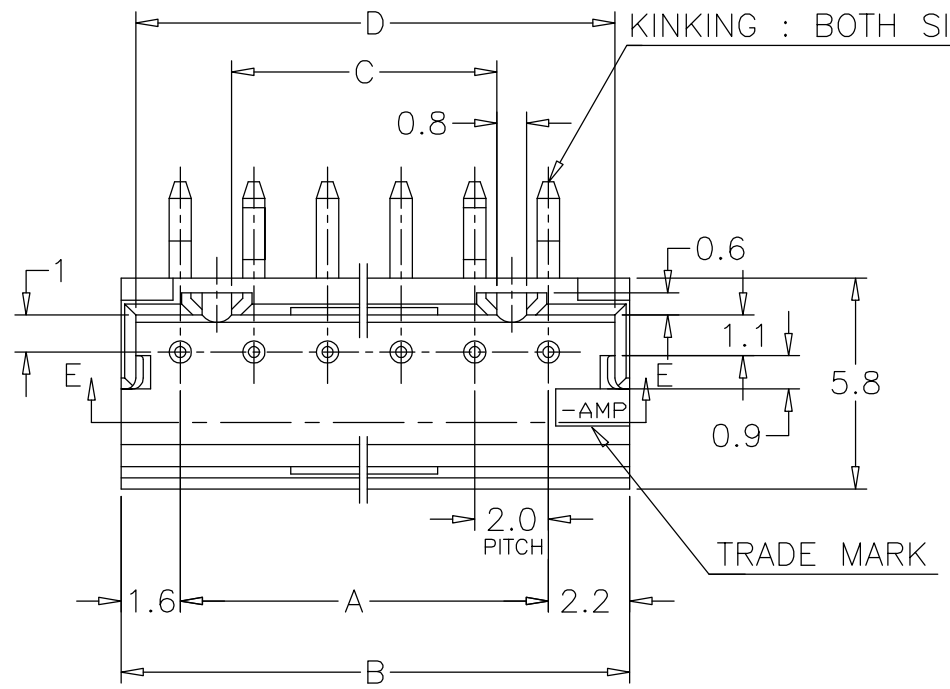

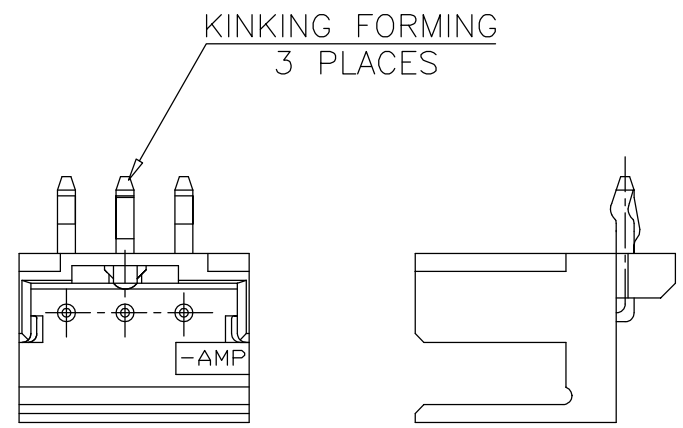

3 POS.
(SCALE: 4–1)

NOTES:
1 MATERIAL : HOUSING–66 NYLON (UL94V–0)
POST–TIN BRASS
2 THIS PRODUCT IS SHORT TINE OF P/N 292250
3 APPLICABLE RECEPTACLE : P/N 173977

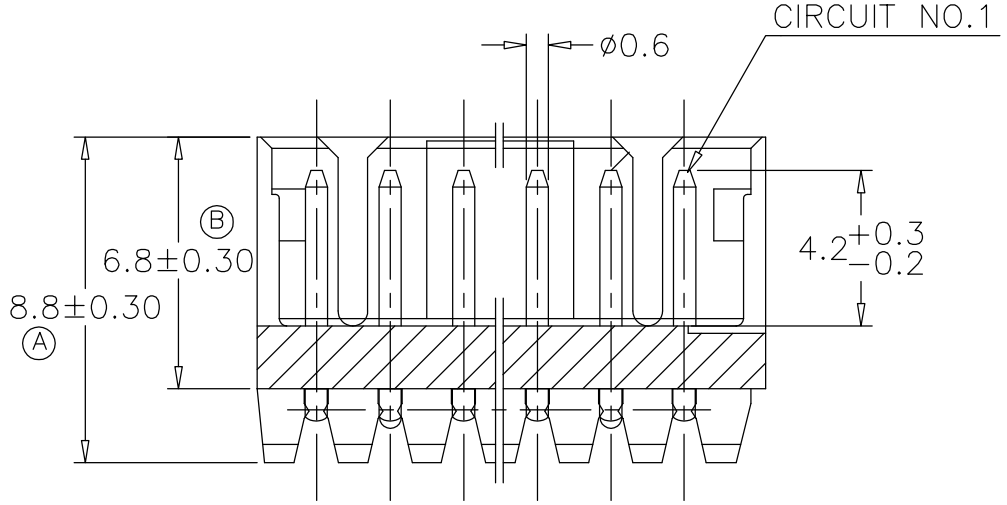

3,5,9,10,15 POS.
SECT E–E

YELLOW						
	4–292130–3	3	4	7.8	—	7.0
NATURAL	1–292130–5	15	28	31.8	25.2	31.0
	1– –0	10	18	21.8	15.2	21.0
	–9	9	16	19.8	13.2	19.0
	–6	6	10	13.8	7.2	13
	–5	5	8	11.8	5.2	11
	292130–3	3	4	7.8	—	7.0
COLOR	P/N	POS.	A	B	C	D

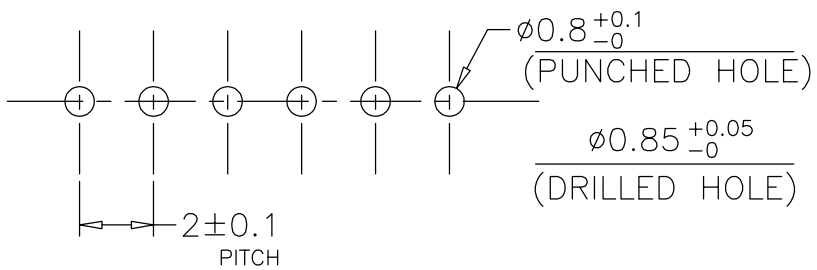

NOT ACCUMULATED TOLERANCE

RECOMMENDABLE P.C. BOARD LAYOUT
(PCB THK : 0.8–1.6)

TOLERANCES UNLESS OTHERWISE SPECIFIED:
10⩾✱ : ±0.2
30⩾✱>10 : ±0.25
100⩾✱>30 : ±0.3
ANGEL : ±3°

THIS DRAWING IS A CONTROLLED DOCUMENT.

DIMENSIONS: MM

TOLERANCES UNLESS OTHERWISE SPECIFIED:
0 PLC ± –
1 PLC ± –
2 PLC ± –
3 PLC ± –
4 PLC ± –
ANGLES ± –

MATERIAL: SEE NOTE
FINISH: SEE NOTE

DWN	S.XU	31JAN03
CHK	S.YAO	31JAN03
APVD	T.SASAKI	31JAN03
PRODUCT SPEC	108–60016	
APPLICATION SPEC	—	
WEIGHT	—	

CUSTOMER DRAWING

Tyco Electronics
Tyco Electronics Corporation
SHANGHAI, CHINA, 200233

NAME
POST HEADER ASS'Y (BOX–H TYPE)
(AMP CT CONNECTOR 2mm PITCH)
–

SIZE	CAGE CODE	DRAWING NO	RESTRICTED TO
A3	00779	C–292130	—

SCALE	SHEET	REV
5:1	1 OF 1	C