DRAWING MADE IN THIRD ANGLE PROJECTION

THIS DRAWING IS UNPUBLISHED. RELEASED FOR PUBLICATION .19 .

© COPYRIGHT 19 BY AMP INCORPORATED. ALL INTERNATIONAL RIGHTS RESERVED.

LOC	DIST	P	F
DF	LO		

REVISIONS

ZONE	LTR	DESCRIPTION	DATE	APPD
	E	REV PER ECO 05-10335 CT	6-06	SG

18 POSN. 20° THROW, LAYER 1 (8)
● = CLOSED TO RESPECTIVE COMMON

POSN.		B	C	D	E	F	G
1		●	●	●	●	●	●
2		●	●	●	●		●
3		●	●	●		●	●
4		●	●	●			●
5		●	●		●	●	●
6		●		●	●	●	●
7		●		●	●		●
8		●		●		●	●
9		●		●			●
10		●			●	●	●
11			●	●	●	●	●
12			●	●	●		●
13			●	●		●	●
14			●	●			●
15			●		●	●	●
16				●	●	●	●
17				●	●		●
18				●		●	●

20 POSN. 18° THROW, LAYER 3 (7)(9)
● = CLOSED TO RESPECTIVE COMMON

POSN.	A	B		D	E	F	G	H	J
1	●	●		●	●	●	●	●	●
2	●	●		●	●	●	●		●
3	●	●		●	●	●		●	●
4	●	●		●	●	●			●
5	●	●		●	●		●	●	●
6	●	●		●	●		●		●
7	●	●		●	●			●	●
8	●	●		●	●				●
9	●	●		●		●	●	●	●
10	●	●		●		●	●		●
11	●	●			●	●	●	●	●
12	●	●			●	●	●		●
13	●	●			●	●		●	●
14	●	●			●	●			●
15	●	●			●		●	●	●
16	●	●			●		●		●
17	●	●			●			●	●
18	●	●			●				●
19	●	●				●	●	●	●
20	●	●				●	●		●

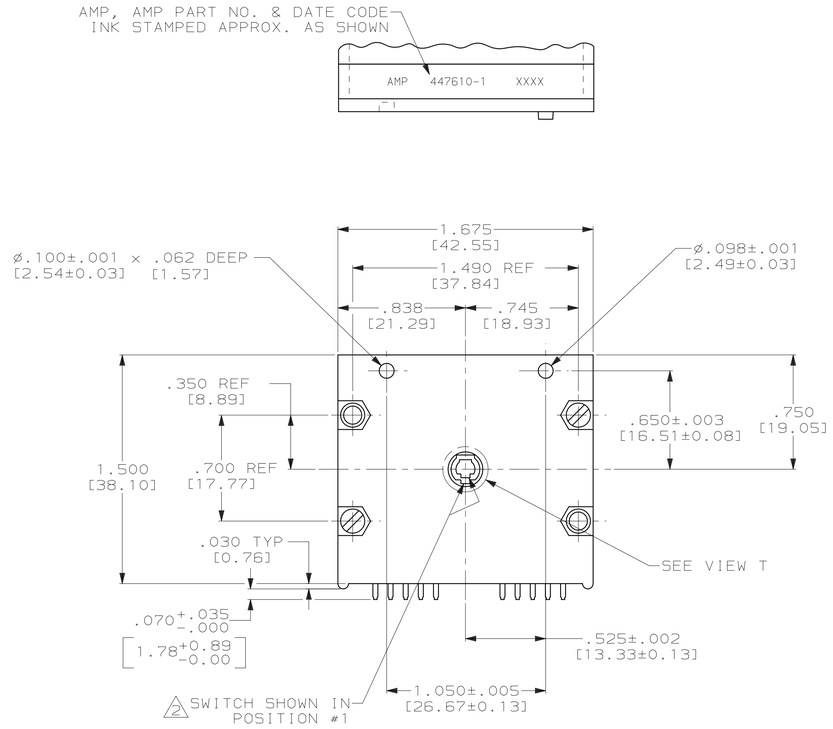

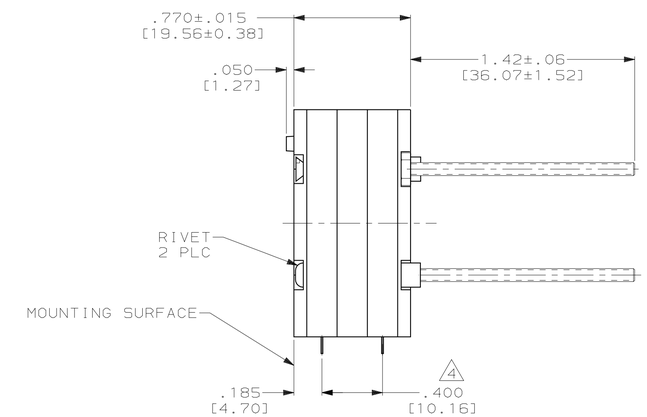

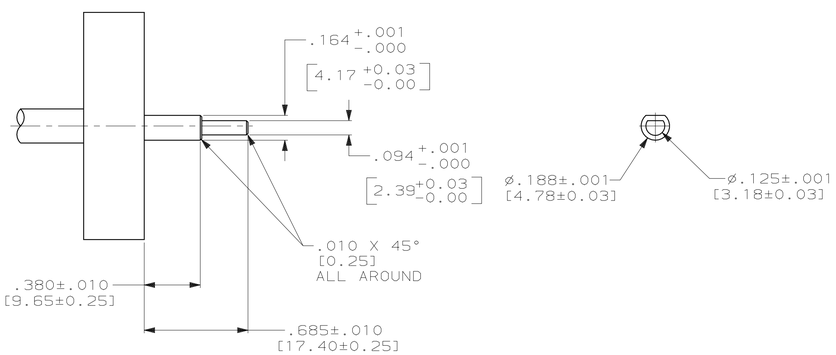

RECOMMENDED DRIVE MECHANISM DIMENSIONS

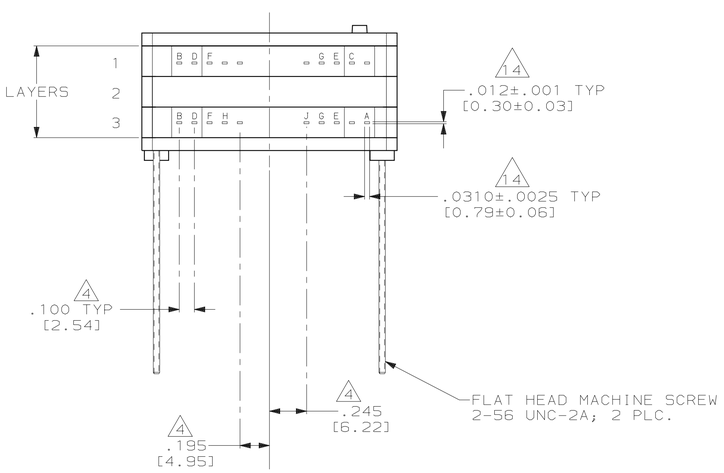

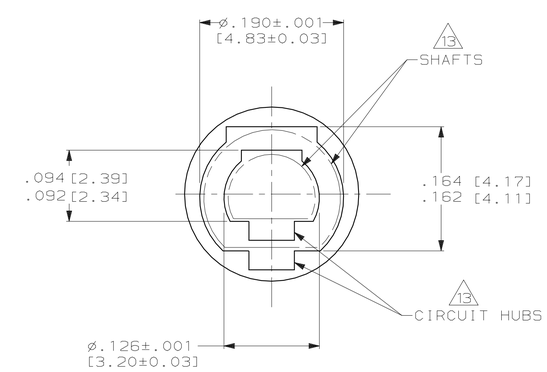

VIEW T
SCALE 10:1

CUSTOMER ASSEMBLY INFORMATION
(SHAFTS SHOWN OUT OF SCALE FOR CLARITY)

1. SWITCH NOT TO BE DISASSEMBLED.
2. SWITCH POSITIONS INCREASE WHEN ROTATED IN A CLOCKWISE DIRECTION.
3. DO NOT MAKE ELECTRICAL CONNECTION TO ANY UNUSED PINS.
4. THESE DIMENSIONS HAVE NON-CUMULATIVE TOLERANCES.
5. THE TORQUE REQUIRED TO ROTATE EITHER #1 OR #2 PRINTED CIRCUIT BOARD IS NOT TO EXCEED 1.5 1NCH-OUNCE.
6. FOR ADDITIONAL SPECIFICATIONS SEE AMP PRODUCT SPEC. 108-7061.
7. IN LAYER 3 PIN "B" IS CLOSED TO "A" COMMON IN POSITION, OPENING BETWEEN DETENT POSITIONS.
8. IN LAYER #1 PINS B,C,D,E & F ARE CLOSED TO "G" COMMON.
9. IN LAYER #3 PINS D,E,F,G & H ARE CLOSED TO "J" COMMON.
10. ~~CODE TRANSITION TO TAKE PLACE MIDWAY BETWEEN DETENT POSITIONS ±1.5°.~~
11. ALL ELECTRICALLY ACTIVE PINS ARE IDENTIFIED BY LETTERS. THOSE NOT ELECTRICALLY ACTIVE ARE SHOWN, BUT NOT LETTERED.
12. SWITCH IS 100% ELECTRICAL TESTED AND INSPECTED.
13. FLATS ON CIRCUIT HUBS AND CUSTOMER GEAR BOX SHAFTS MUST BE ORIENTED AS SHOWN.
14. CONTACT DIMENSION DOES NOT INCLUDE CUT-OFF BURR.

447610-1
PART NO.

DO NOT SCALE PRINT. UNLESS SPECIFIED DIMENSIONS IN INCHES [mm] TOLERANCES ON : 2 PLC DEC ± - 3 PLC DEC ± .010 [0.25] ANGLES ± -	DR 1-17-91 CHUCK THOMAS	AMP Incorporated Harrisburg, PA 17105-3608
	CHK 1-22-91 S.GLADFELTER	
	APPD 1-22-91 S.GLADFELTER	NAME ROTARY SWITCH ASSY, 3510 SERIES, MULTI-BUSHING, 20 POSN PRIMARY, 18 POSN SECONDARY, 3 LAYER
MATERIAL –	APPD 1-22-91 C.THOMAS	
	PRODUCT SPEC –	
FINISH –	APPLICATION SPEC –	SIZE D / CAGE CODE 00779 / DRAWING NO 447610
	WEIGHT –	SCALE 2:1 / SHEET 1 OF 1

CUSTOMER DRAWING

AMP 1756-3 REV 11-89

14-JUN-06 12:54:45 us016412 /home/us016412/docmod