THIS DRAWING IS UNPUBLISHED. RELEASED FOR PUBLICATION -,- .
© COPYRIGHT - By - ALL RIGHTS RESERVED.

REVISIONS					
P	LTR	DESCRIPTION	DATE	DWN	APVD
	M2	REVISED PER ECO-15-016493	27NOV2015	NK	DR

9 PACKED 5000 PIECES

10 PACKED 100 PIECES

11 PRELIMINARY - NOT FOR PRODUCTION

12 INSULATION: PVDF
COLOR: ORANGE

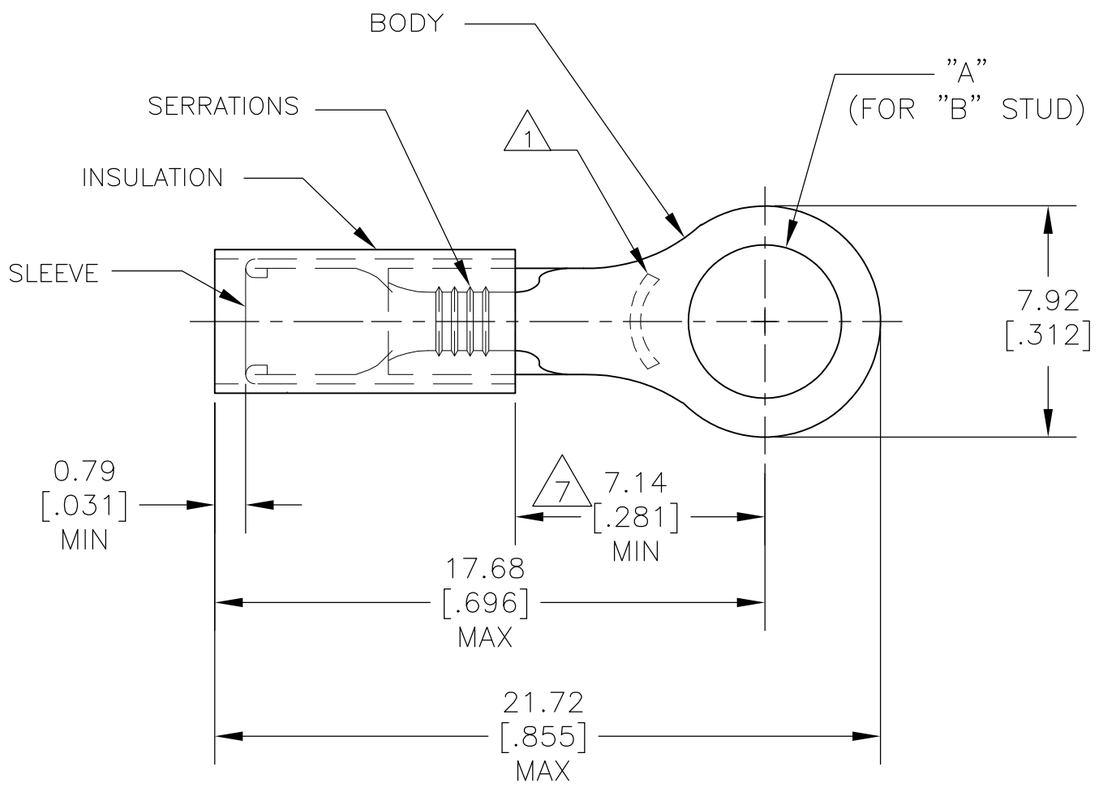

1 STAMP "AMP 18-16" APPROX AS SHOWN

2 FOR 1.40[.055] TO 3.43[.135] WIRE INSULATION DIA.

3 TONGUE MATERIAL THK: 0.79±0.05 [.031±.002]

4 BODY: MATERIAL: COPPER ASTM B152
FINISH: NICKEL PL. SAE AMS QQ-N-290
0.0076 [.0003] AVG EXT THK.

5 SLEEVE: MATERIAL: COPPER ASTM B152
FINISH: NICKEL PL. SAE AMS QQ-N-290
0.0076 [.0003] AVG EXT THK.

6 INSULATION: MATERIAL: PTFE(ASTM D3295)
COLOR: ORANGE

7 DIMENSION APPLIES FROM EDGE OF WIRE BARREL TO CENTER OF STUD HOLE

8 PACKED 1000 PIECES

6		#10	5.00±0.008 [.197±.003]	-	9-50836-1 10 11
12	PRELIMINARY	#10	5.00±0.008 [.197±.003]	50836-7 9	50836-5 8
12	PRELIMINARY	M4[#8]	4.34±0.008 [.171±.003]	50836-6 9	50836-4 8
6		#10	5.00±0.008 [.197±.003]	50836-3 9	50836-1 8
6		M4[#8]	4.34±0.008 [.171±.003]	50836-2 9	50836 8
		"B"	"A"	MYLAR TAPE PART NUMBER	LOOSE PIECE PART NUMBER

TEC INCORPORATED
CUSTOMER SERVICE SYSTEMS

FOR ADDITIONAL PRODUCT INFORMATION OR COPIES OF DRAWINGS AND TECHNICAL DOCUMENTS	PRODUCT INFORMATION CENTER 1-800-522-6752
FOR APPLICATION TOOLING INFORMATION	TOOLING ASSISTANCE CENTER 1-800-722-1111
FOR ORDER ENTRY	1-800-526-5142

MAX RECOMMENDED OPERATING TEMPERATURE: 288°C [550° F]

VOLTAGE RATING: 300V MAX

CIRCULAR MIL AREA: 0.81-1.42mm² [1600-2800] STRANDED WIRE ONLY

THIS DRAWING IS A CONTROLLED DOCUMENT.

DIMENSIONS: mm[INCHES]

TOLERANCES UNLESS OTHERWISE SPECIFIED:
0 PLC ± -
1 PLC ± -
2 PLC ± 0.20[.008]
3 PLC ± -
4 PLC ± -
ANGLES ± -

MATERIAL 4 5 6 12

FINISH 4 5 6 12

DWN	R.GRZYBOWSKI	18SEP09
CHK	T MICHIELUTTI	18SEP09
APVD	M.PERCHERKE	18SEP09
PRODUCT SPEC	—	
APPLICATION SPEC	—	
WEIGHT		

TE Connectivity

NAME: TERMINAL, PIDG , STRATO-THERM, RING TONGUE, WIRE SIZE: 18-16
-

SIZE	CAGE CODE	DRAWING NO	RESTRICTED TO
A3	00779	C-50836	—

CUSTOMER DRAWING | SCALE 5:1 | SHEET 1 OF 1 | REV M2

1470-19 (1/15)