Feb.1.2018 Copyright 2018 HIROSE ELECTRIC CO., LTD. All Rights Reserved.

	COUNT	DESCRIPTION OF REVISIONS	BY	CHKD	DATE		COUNT	DESCRIPTION OF REVISIONS	BY	CHKD	DATE
△					. .	△					. .
△					. .	△					. .
△					. .	△					. .

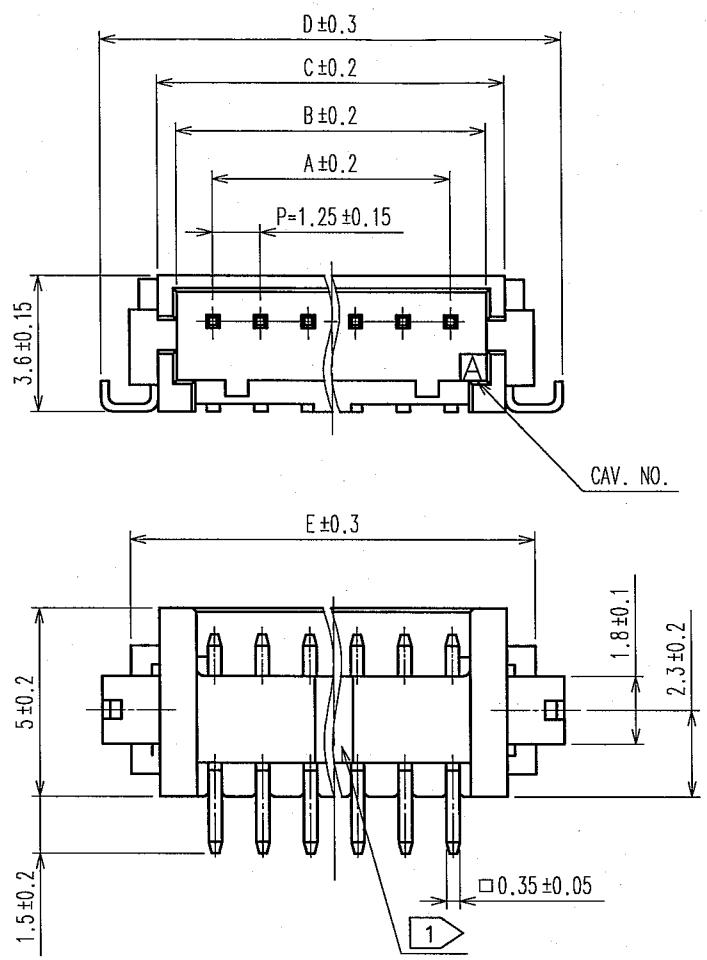

CODE No.	PARTS No.	NUMBER OF CONTACT	A	B	C	D	E
CL536-0301-8-21	DF13A- 2P-1.25H(21)	2	1.25	3.15	4.15	7.15	5.65
CL536-0302-0-21	DF13A- 3P-1.25H(21)	3	2.50	4.40	5.40	8.40	6.90
CL536-0303-3-21	DF13A- 4P-1.25H(21)	4	3.75	5.65	6.65	9.65	8.15
CL536-0304-6-21	DF13A- 5P-1.25H(21)	5	5.00	6.90	7.90	10.90	9.40
CL536-0305-9-21	DF13A- 6P-1.25H(21)	6	6.25	8.15	9.15	12.15	10.65
CL536-0306-1-21	DF13A- 7P-1.25H(21)	7	7.50	9.40	10.40	13.40	11.90
CL536-0307-4-21	DF13A- 8P-1.25H(21)	8	8.75	10.65	11.65	14.65	13.15
CL536-0308-7-21	DF13A- 9P-1.25H(21)	9	10.00	11.90	12.90	15.90	14.40
CL536-0309-0-21	DF13A-10P-1.25H(21)	10	11.25	13.15	14.15	17.15	15.65
CL536-0310-9-21	DF13A-11P-1.25H(21)	11	12.50	14.40	15.40	18.40	16.90
CL536-0311-1-21	DF13A-12P-1.25H(21)	12	13.75	15.65	16.65	19.65	18.15
CL536-0313-7-21	DF13A-14P-1.25H(21)	14	16.25	18.15	19.15	22.15	20.65
CL536-0314-0-21	DF13A-15P-1.25H(21)	15	17.50	19.40	20.40	23.40	21.90

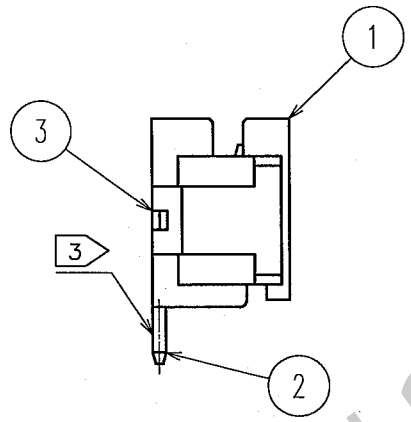

APPLICATION DRAWING

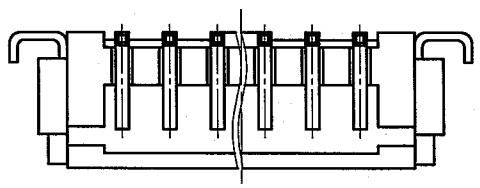

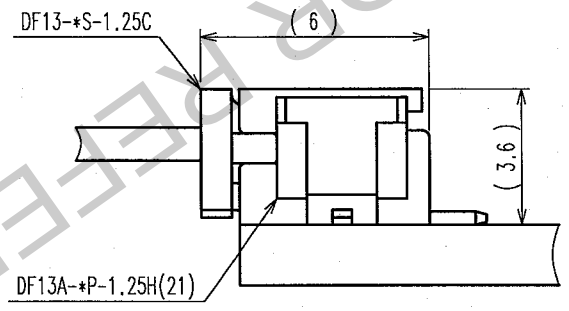

RECOMMENDED PATTERN

NOTE 1: THERE SHALL BE STANDOFF MORE THAN FIVE CONTACTS.
2: WHEN THIS CONNECTOR HAS TWO OR THREE CONTACTS, THE LOCK SHALL BE SET AT THE CENTER OF HOUSING. IF MORE THAN FOUR, THE TWO LOCKS SHALL BE SET AS SHOWN ON THIS DRAWING.
3: FLATNESS OF LEAD WITH REINFORCED METAL FITTINGS SHALL BE WITHIN 0.1mm.
4: WHEN THIS CONNECTOR HAS MORE THAN SEVEN CONTACTS, HRS MARKING AND POLARIZATION MARKING SHIFT TO THE PLACE INDICATING DOTTED LINES.

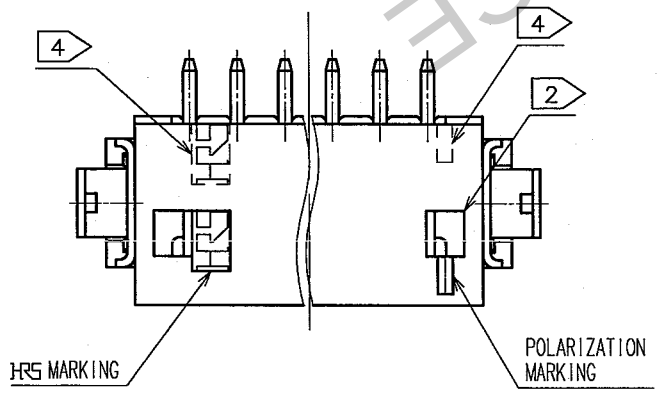

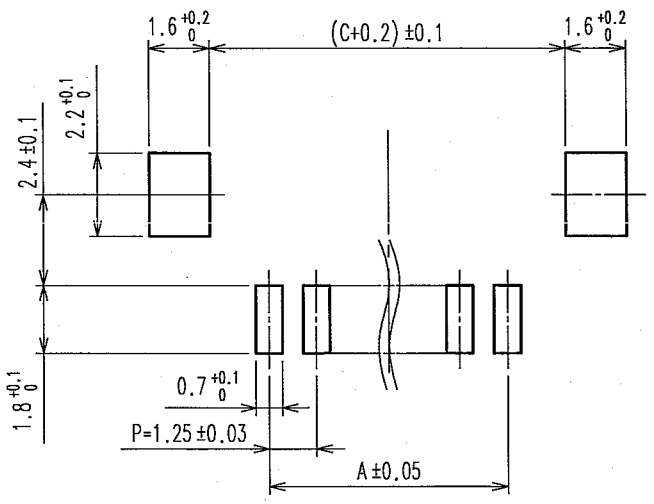

No.	MATERIAL	FINISH, REMARKS	No.	MATERIAL	FINISH, REMARKS
3	PHOSPHOR BRONZE	SURFACE : TIN PLATED 1μ mm min.			
2	BRASS	SURFACE : TIN PLATED 1μ mm min.	5	POLYESTER	COVER TAPE, CLEAR
1	POLYAMIDE	BEIGE(UL94V-0)	4	PS	EMBOSSED CARRIER TAPE , CLEAR

CODE NO.(OLD)	DRAWN	DESIGNED	CHECKED	APPROVED	RELEASED
	A.Miura '05.10.24	T.Rumogawa '05.10.27	H.Umehara '05.10.31	T.Ono 05.10.31	

SCALE 5 : 1	DRAWING NO. EDC3-162444-04	PART NO. DF13A-*P-1.25H(21)
UNITS mm	HRS HIROSE ELECTRIC CO., LTD	CODE NO. CL536- 1/2

TO

FORM NO.229

FOR REFERENCE

Feb.1.2018 Copyright 2018 HIROSE ELECTRIC CO., LTD. All Rights Reserved.

COUNT	DESCRIPTION OF REVISIONS	BY	CHKD	DATE	COUNT	DESCRIPTION OF REVISIONS	BY	CHKD	DATE
				. .					. .
				. .					. .
				. .					. .

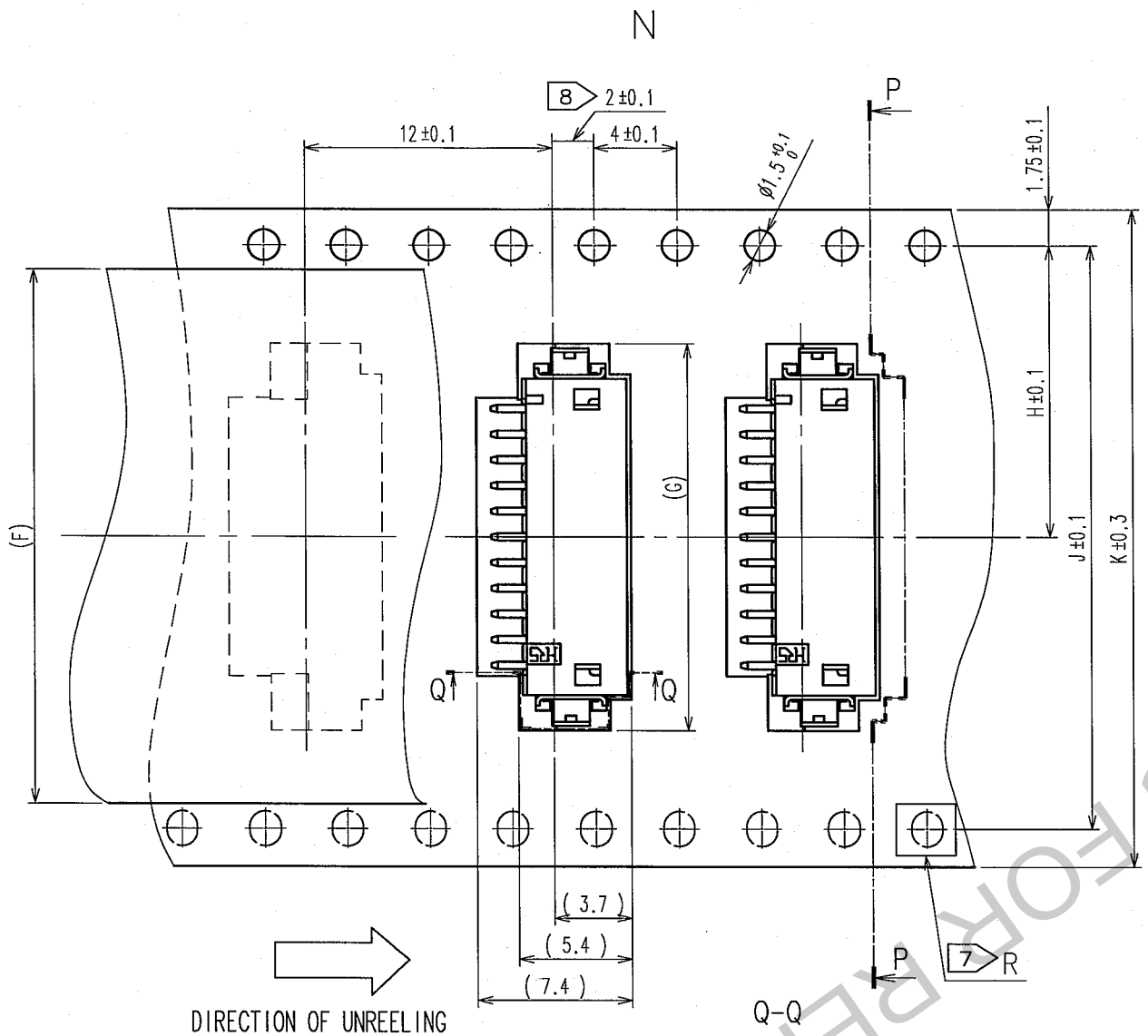

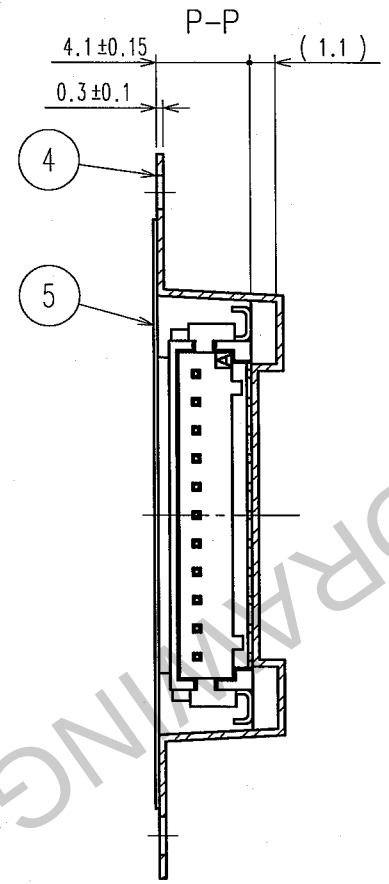

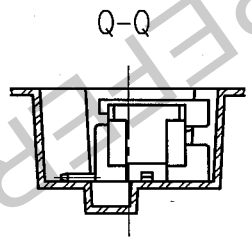

9 DETAIL OF PART NO. LABEL

DATE OF MANUFACTURED	** ** **
CODE NO.	
PART NO.	DF13A-*P-1.25H(21)
QUANTITY	1000 KO
SUPPLIER	HIROSE ELECTRIC CO.,LTD.

NOTE 5 :1REEL:1000 CONNECTORS.
6 :AT THE BEGINNING OF THE REEL,30 COMPONENTS SHALL BE EMPTY.
AT THE END OF THE REEL, 20 COMPONENTS SHALL BE EMPTY.
7 :WHEN THE TAPE WIDTH IS 32 OR 44mm,SPROCKET HOLES SHALL BE SET ON BOTH SIDES OF REEL AS SHOWN ON THIS DRAWING.
8 :WHEN THE TAPE WIDTH IS 44mm OR OVER, THE TOLERANCE SHALL BE 2±0.15.
9 :DETAIL OF PART NO. LABEL IS WRITTEN IN JAPANESE.
10 :REEL FORCE BETWEEN EMBOSSED CARRIER TAPE AND COVER TAPE IS 0.1~0.7N.

HRS DRAWING FOR REFERENCE

CODE No.	PART No.	F	G	H	J	K	L	M
CL536-0301-8-21	DF13A- 2P-1.25H(21)	13.5	7.60	7.5		16	16.4	22.4
CL536-0302-0-21	DF13A- 3P-1.25H(21)	13.5	8.85	7.5		16	16.4	22.4
CL536-0303-3-21	DF13A- 4P-1.25H(21)	21.5	10.1	11.5		24	24.4	30.4
CL536-0304-6-21	DF13A- 5P-1.25H(21)	21.5	11.35	11.5		24	24.4	30.4
CL536-0305-9-21	DF13A- 6P-1.25H(21)	21.5	12.6	11.5		24	24.4	30.4
CL536-0306-1-21	DF13A- 7P-1.25H(21)	21.5	13.85	11.5		24	24.4	30.4
CL536-0307-4-21	DF13A- 8P-1.25H(21)	21.5	15.1	11.5		24	24.4	30.4
CL536-0308-7-21	DF13A- 9P-1.25H(21)	21.5	16.35	11.5		24	24.4	30.4
CL536-0309-0-21	DF13A-10P-1.25H(21)	21.5	17.6	11.5		24	24.4	30.4
CL536-0310-9-21	DF13A-11P-1.25H(21)	26.0	18.85	14.2	28.4	32	32.4	38.4
CL536-0311-1-21	DF13A-12P-1.25H(21)	26.0	20.1	14.2	28.4	32	32.4	38.4
CL536-0313-7-21	DF13A-14P-1.25H(21)	26.0	22.6	14.2	28.4	32	32.4	38.4
CL536-0314-0-21	DF13A-15P-1.25H(21)	37.0	23.85	20.2	40.4	44	44.4	50.4

STYLE AND DIMENSION OF REEL

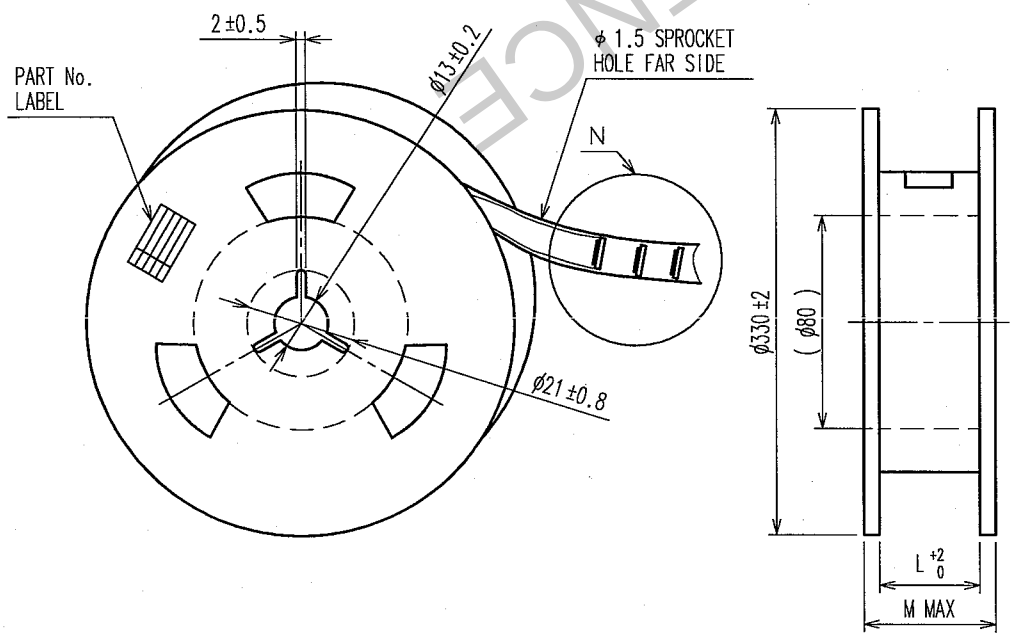

R(10:1)

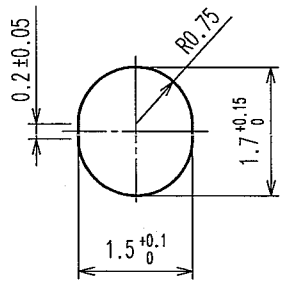

TO

CODE NO.(OLD)	DRAWN	DESIGNED	CHECKED	APPROVED	RELEASED
CL	A.Miura '05.10.24	T.Kumozawa '05.10.27	H.Uchehara '05.10.31	T.Ono '05.10.31	

SCALE FREE
UNITS mm

DRAWING NO. EDC3-162444-04

HRS HIROSE ELECTRIC CO., LTD

PART NO. DF13A-*P-1.25H(21)

CODE NO. CL536-

2/

FORM NO.229