THIS DRAWING IS UNPUBLISHED. RELEASED FOR PUBLICATION – ,– .
© COPYRIGHT – By – ALL RIGHTS RESERVED.

REVISIONS

P	LTR	DESCRIPTION	DATE	DWN	APVD
	C	REVISED PER ECO–15–004633	30MAY2015	NK	JO
	C1	REVISED PER ECO–19–016614	13NOV2019	RS	JO

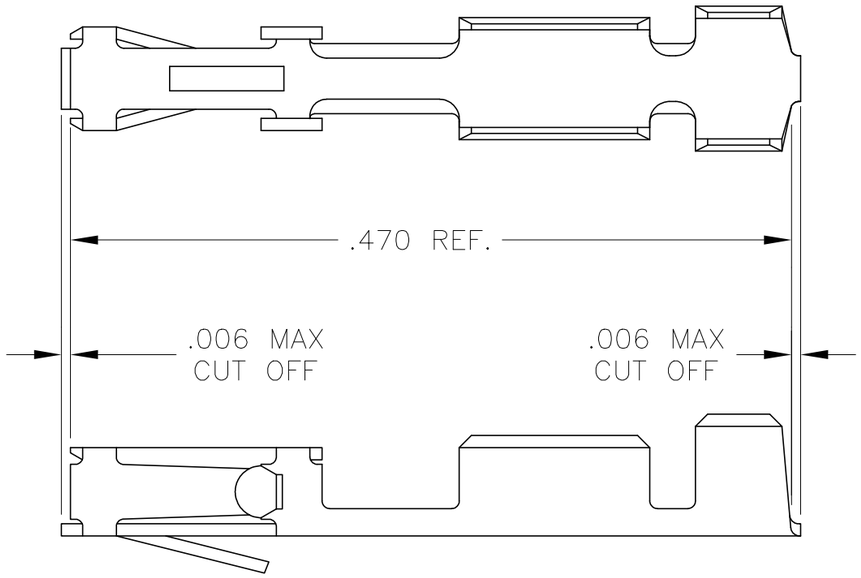

1 WIRE RANGE: #20–#24.

2 INSULATION RANGE: .069 MAX. DIA.

3 FOR SECTIONS AND ADDITIONAL DIMENSIONS SEE AMP CUSTOMER DRAWING#85969.

OBSOLETE	~~86016–6~~	GOLD FLASH OVER .000050 NICKEL ENTIRE CONTACT,.000050 GOLD IN CONTACT AREA
	86016–5	GOLD FLASH OVER .000050 NICKEL ENTIRE CONTACT,.000015 GOLD IN CONTACT AREA
	86016–4	.000050 GOLD OVER .000050 NICKEL
	86016–3	PREPLATED:(HALT).000078–.000158 BRIGHT TIN
	86016–2	GOLD FLASH OVER .000050 NICKEL ENTIRE CONTACT,.000030 GOLD IN CONTACT AREA
	86016–1	.000030 GOLD OVER .000050 NICKEL
	PART NUMBER	FINISH

THIS DRAWING IS A CONTROLLED DOCUMENT.

DIMENSIONS: INCHES

TOLERANCES UNLESS OTHERWISE SPECIFIED:
0 PLC ± –
1 PLC ± –
2 PLC ± –
3 PLC ± –
4 PLC ± –
ANGLES ± –

MATERIAL: CU–NI–SI
FINISH: –

DWN E.C. CLAYBAUGH –
CHK – –
APVD – –
PRODUCT SPEC –
APPLICATION SPEC –
WEIGHT –

TE Connectivity

NAME: RECEPTACLE CONTACT, MOD IV CRIMP SNAP–IN LOOSE PIECE –

SIZE A3 | CAGE CODE 00779 | DRAWING NO C–86016 | RESTRICTED TO –

CUSTOMER DRAWING | SCALE 10:1 | SHEET 1 OF 1 | REV C1