THIS DRAWING IS UNPUBLISHED. RELEASED FOR PUBLICATION -,- .
© COPYRIGHT - BY TYCO ELECTRONICS CORPORATION. ALL RIGHTS RESERVED.

LOC	DIST
AD	25

REVISIONS

P	LTR	DESCRIPTION	DATE	DWN	APVD
	0	RELEASE PER EC 0512-0082-05	03JUN05	JDP	AMS
	01	REVISED PER ECO-09-024927	10NOV09	KK	AEG

1. HOUSING MATERIAL: GLASS-FILLED POLYMER.
2. CONTACT MATERIAL: COPPER ALLOY.
3. CONTACT FINISH: DIN 41612 CLASS 2 IN CONTACT AREA. TIN PLATE ON POSTS.
4. CONTACT POINT.
5. RECOMMENDED HOLE SIZE FOR MANUAL APPLICATION OF CONNECTOR ONTO PC BOARD.
6. PART NUMBER, DATE CODE IDENTIFICATION, CSA LOGO IN THIS APPROXIMATE AREA ON REVERSE SIDE.
7. OBSOLETE PARTS: OBSOLETE CIS STREAMLINING PER D.RENAUD/D.SINISI

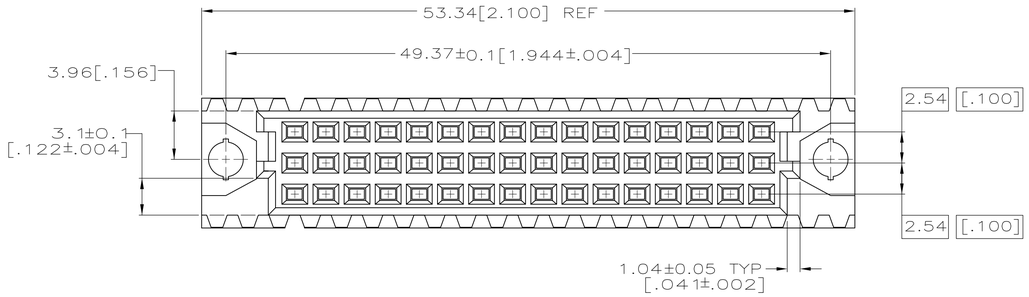

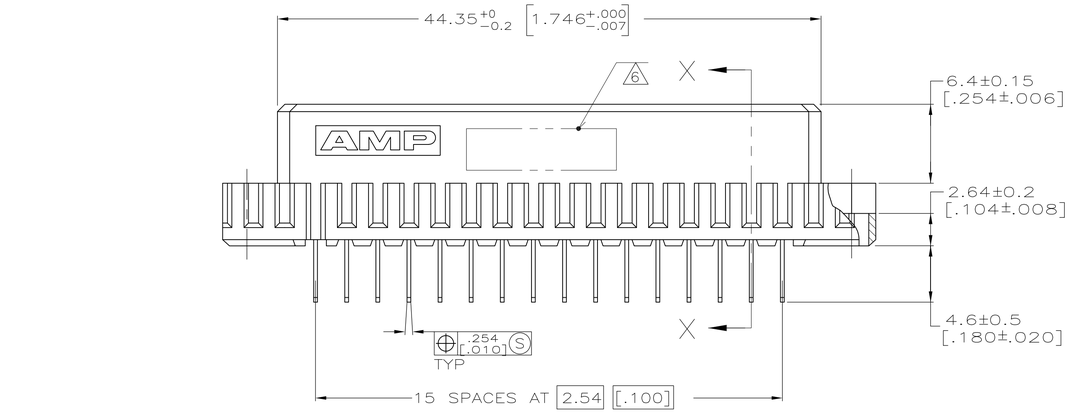

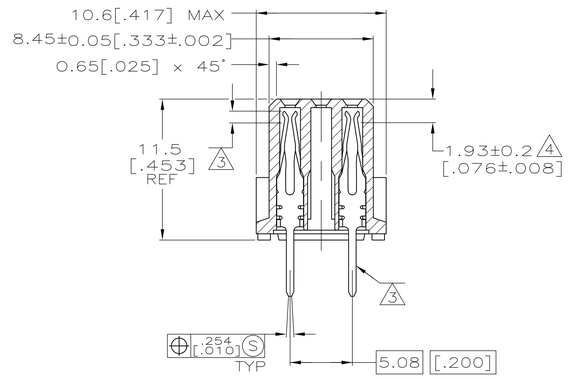

SECTION X-X

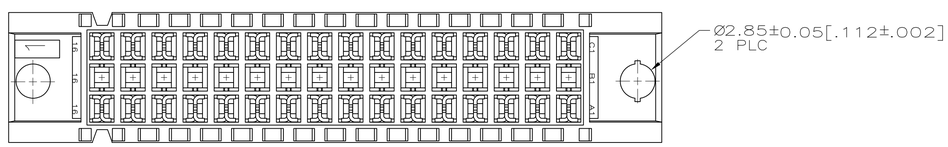

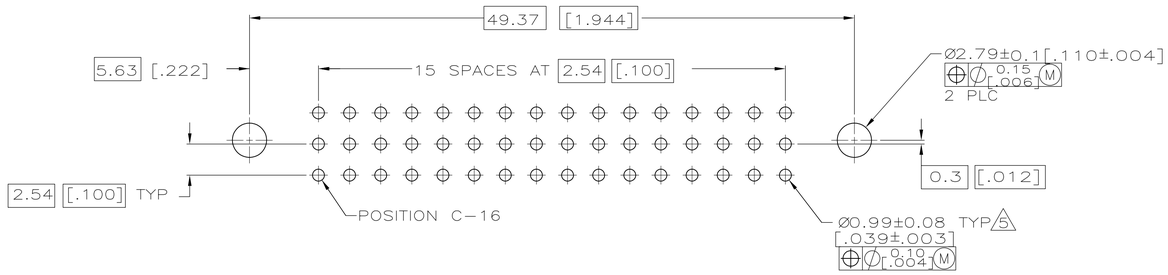

PC BOARD LAYOUT

7 OBSOLETE	3	1 THRU 16	X	–	X	32	5650466-5
	3	1 THRU 16	X	–	X	32	~~5650466-4~~
FINISH		POSITIONS LOADED	ROWS LOADED C	B	A	NO. OF LOADED POSITION	ASSY PART NUMBER

THIS DRAWING IS A CONTROLLED DOCUMENT.

DIMENSIONS: mm [INCHES]

TOLERANCES UNLESS OTHERWISE SPECIFIED:
0 PLC ± –
1 PLC ± –
2 PLC ± –
3 PLC ± 0.13[.005]
4 PLC ± –
ANGLES ± –

MATERIAL 1 2
FINISH 3

DWN J. POLIGNONE 03JUN05
CHK A. SHARPE 03JUN05
APVD A. SHARPE 03JUN05
PRODUCT SPEC –
APPLICATION SPEC –
WEIGHT –
CUSTOMER DRAWING

Tyco Electronics
Tyco Electronics Corporation
Harrisburg, PA 17105-3608

NAME
ASSEMBLY, RECEPTACLE, EUROCARD, TYPE C/2, A and C, 32/48 POSITION, 4.57[.180] SOLDER POSTS

SIZE	CAGE CODE	DRAWING NO	RESTRICTED TO
A1	00779	C-5650466	–

SCALE 4:1 SHEET 1 OF 1 REV 01