NOTES:

1. MATERIALS AND FINISHES:
   BODY AND BAYONET SLEEVE - BRASS, NICKEL PLATING
   OUTER CONTACT - BeCu, NICKEL PLATING
   CONTACT - PHOSPHOR BRONZE, GOLD PLATING
   FERRULE - COPPER, NICKEL PLATING
   INSULATOR - PTFE

2. ELECTRICAL:
   A. IMPEDANCE: 75 OHM
   B. FREQUENCY RANGE: DC - 4 GHz
   C. RETURN LOSS: 30 dB MIN @ 3 GHz
   D. DIELECTRIC WITHSTANDING VOLTAGE: 1000 VRMS, MIN.
   E. INSULATION RESISTANCE: 10,000 MΩ MIN

3. MECHANICAL:
   A. DURABILITY: 500 CYCLES MIN.
   B. TEMPERATURE RANGE: -65° C TO +165° C

4. ENVIRONMENTAL:
   A. THERMAL SHOCK PER MIL-STD-202 METHOD 107
      TEST CONDITION B (EXCEPT HIGH TEMP @200°C)
   B. VIBRATION: MIL-STD-202 METHOD 204 TEST CONDITION B
   C. SHOCK: MIL-STD-202 METHOD 213 TEST CONDITION B
   D. CORROSION: MIL-STD-202 METHOD 101
      TEST CONDITION B 5% SALT SOLUTION

5. PACKAGING:
   A. QUANTITY: SINGLE PACK
   B. MARKING: BAG TO BE MARKED:
      "AMPHENOLRF, 34-1037-100 DATE CODE"
      U.S. PATENT NO. 7,553,177

6. HIGH DENSITY INSTALLATION/REMOVAL TOOL: 227-T2000

7. CABLE ASSEMBLY INSTRUCTIONS:
   A. TRIM CABLE AS SHOWN.
   B. CRIMP CONTACT TO CABLE CENTER CONDUCTOR
      WITH .042" SQUARE DIE
   C. CRIMP FERRULE WITH .197" HEX.

8. SHOWS CABLE ENTRY DIMENSIONS.

THIRD ANGLE PROJ.

REVISIONS				
REV	DESCRIPTION	DATE	ECO	APPR
A	RELEASE FOR MFG.	3/21/11	48506	HR

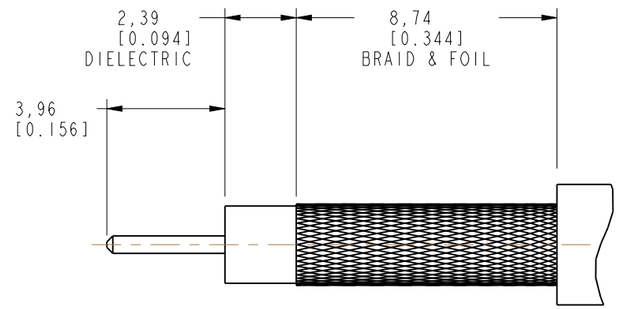

SCALE 5.000

RECOMMENDED CABLE STRIPPING DIMENSIONS

U.S. PATENT # 7,553,177

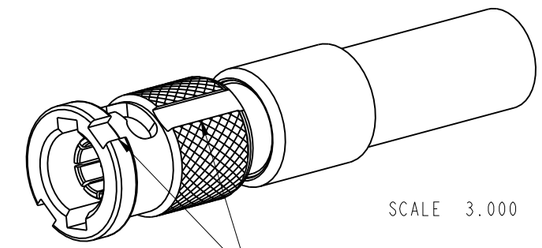

SCALE 3.000

STUD LOCATING
AND INSTALLATION/
REMOVAL TOOL GROOVES

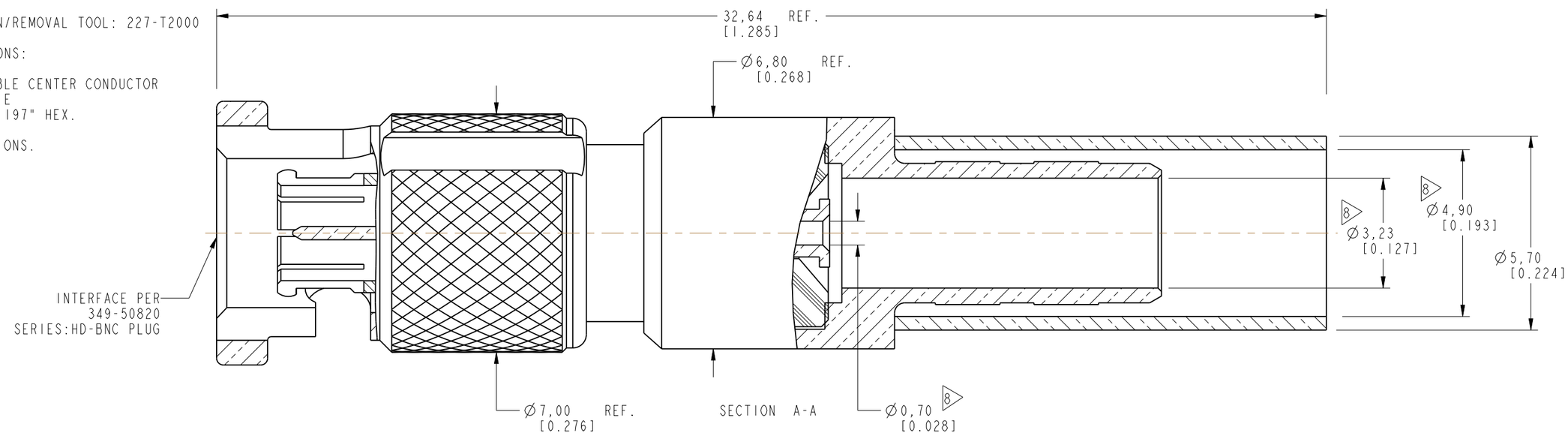

CUSTOMER OUTLINE DRAWING

ALL OTHER SHEETS ARE FOR INTERNAL USE ONLY

UNLESS OTHERWISE SPECIFIED, DIMENSIONS ARE IN METRIC AND TOLERANCES ARE:

<0.5mm	0.5 - 6mm	6 - 30mm	30 - 120mm	ANGLES
± 0.05mm	±0.1mm	±0.2mm	± 0.3mm	±1°

NOTICE - These drawings, specifications, or other data (1) are, and remain the property of Amphenol corp. (2) must be returned upon requiest; and (3) arre confidential and not to be disclosed to any person other than those to whom they are given by Amphenol Corp. the funishing of these drawings, specifications, or other data by Amphenol Corp., or to any other person to anyone for any purpose is not to be regarded by implicatioin or otherwise in any manner licensing, granting rights to permitting such holder or any other sperson to manufacture, use or sell any product, process or design, patented or otherwsie, that may in any way be related to or disclosed by said drawings, specifications, or other data.

MATERIAL SEE NOTES	DRAWN A ARUN PRABU	DATE 27-Sep-10	TITLE HD-BNC STR PLUG FOR B1855 ENH/ IMAGE 360
	ENGINEER A ARUN PRABU	DATE 27-Sep-10	
REFERENCE EAR # 4296 CONFIGURATION LEVEL: Prototype	APPROVED K. CAPOZZI	DATE 3/21/11	SCALE: 7.6:1.0 SHEET 2 OF 2
	CAD FILE Root Folder/HD-BNC/34-1037-100		DWG SIZE B / REV A
FINISH			

Amphenol RF
Danbury CT USA, Tainan, Taiwan, Shenzhen, China
www.amphenolrf.com

DRAWING NO. 34-1037-100
ITEM NO. 34-1037-100
PART NO. 34-1037-100