19-1657; Rev 1; 1/11

High-Speed, Low-Voltage, 4Ω, SPDT CMOS Analog Switch

MAX4644

General Description

The MAX4644 is a single-pole/double-throw (SPDT) switch that operates from a single supply ranging from +1.8V to +5.5V. It provides low 4Ω on-resistance (R_{ON}) as well as 1Ω R_{ON} flatness over the entire analog-signal range. The MAX4644 offers fast switching times of less than 20ns while ensuring break-before-make operation. It typically consumes only 0.01µW of quiescent power, making it suitable for use in low-power, portable applications.

The MAX4644's features include low leakage currents over the entire temperature range, TTL/CMOS-compatible digital logic, and excellent AC characteristics. It is packaged in either a small 8-pin µMAX® or a tiny 6-pin SOT23.

Applications

Battery-Operated Equipment

Audio and Video Signal Routing

Low-Voltage Data-Acquisition Systems

Sample-and-Hold Circuits

Communications Circuits

µMAX is a registered trademark of Maxim Integrated Products, Inc.

Features

- **+1.8V to +5.5V Single-Supply Operation**
- **Rail-to-Rail Analog-Signal Range**
- **Guaranteed R_{ON}**
  - **4Ω max (+5V Supply)**
  - **8Ω max (+3V Supply)**
- **+1.8V Operation**
  - **R_{ON} 30Ω (typ) Over Temperature**
  - **t_{ON} 18ns (typ), t_{OFF} 12ns typ**
- **Guaranteed R_{ON} Flatness: 0.75Ω (typ) (+5V Supply)**
- **Guaranteed R_{ON} Match Between Channels: 0.1Ω typ (+5V Supply)**
- **Low Leakage (< 0.35nA) Over Entire Temperature Range**
- **Excellent AC Characteristics**
  - **Low Crosstalk: -82dB at 1MHz**
  - **High Off-Isolation: -80dB at 1MHz**
  - **0.018% Total Harmonic Distortion**
- **Low Power Consumption: < 0.01µW**

Ordering Information

PART	TEMP. RANGE	PIN-PACKAGE	TOP MARK
MAX4644EUT+T	-40°C to +85°C	6 SOT23	AAHQ
MAX4644EUA+T	-40°C to +85°C	8 µMAX	—

+Denotes a lead(Pb)-free/RoHS-compliant package.
T = Tape and reel.

Pin Configurations/Functional Diagrams/Truth Table

TOP VIEW

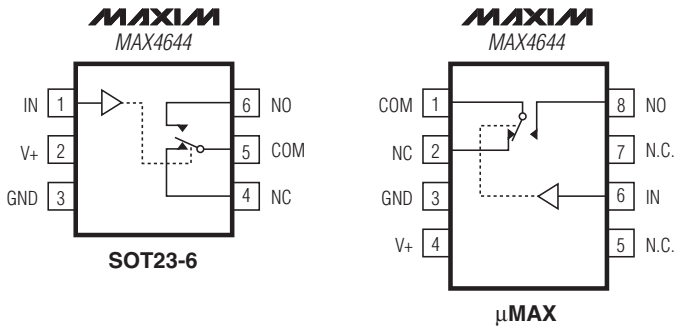

MAX4644		
IN	NC	NO
0	ON	OFF
1	OFF	ON

For pricing, delivery, and ordering information, please contact Maxim Direct at 1-888-629-4642, or visit Maxim's website at www.maxim-ic.com.

High-Speed, Low-Voltage, 4Ω, SPDT CMOS Analog Switch

ABSOLUTE MAXIMUM RATINGS

(All voltages referenced to GND.)
V+ .....-0.3V to +6V
IN, COM, NO, NC (Note 1) .....-0.3V to (V+ + 0.3V)
Continuous Current (any terminal).....±20mA
Continuous Current (NO, NC, and COM) .....±50mA
Peak Current (NO, NC, and COM, pulsed at 1ms, 10% duty cycle)..... ±100mA

Continuous Power Dissipation (T_A = +70°C)
6-Pin SOT23 (derate 8.70mW/°C above +70°C)..... 696mW
8-Pin μMAX (derate 4.5mW/°C above +70°C) 362mW
Operating Temperature Range .....-40°C to +85°C
Junction Temperature .....+150°C
Storage Temperature Range .....-65°C to +150°C
Lead Temperature (soldering, 10s) ..... +300°C
Soldering Temperature (reflow) ..... +260°C

Note 1: Signals on NO, NC, COM, or IN exceeding V+ or GND are clamped by internal diodes. Limit forward-diode current to maximum current rating.

Stresses beyond those listed under "Absolute Maximum Ratings" may cause permanent damage to the device. These are stress ratings only, and functional operation of the device at these or any other conditions beyond those indicated in the operational sections of the specifications is not implied. Exposure to absolute maximum rating conditions for extended periods may affect device reliability.

ELECTRICAL CHARACTERISTICS—Single +5V Supply

(V+ = +4.5V to +5.5V, V_{INH} = 2.4V, V_{INL} = 0.8V, T_A = T_{MIN} to T_{MAX}, unless otherwise noted. Typical values are at T_A = +25°C.)

PARAMETER	SYMBOL	CONDITIONS		MIN	TYP	MAX	UNITS
ANALOG SWITCH							
Analog-Signal Range	V_{COM}, V_{NO}, V_{NC}			0		V+	V
On-Resistance	R_{ON}	V+ = 4.5V, I_{COM} = 10mA, V_{NO} or V_{NC} = 0 to V+	T_A = +25°C		2.5	4	Ω
			T_A = T_{MIN} to T_{MAX}			4.75	
On-Resistance Match Between Channels (Note 2)	ΔR_{ON}	V+ = 4.5V, I_{COM} = 10mA, V_{NO} or V_{NC} = 0 to V+	T_A = +25°C		0.1		Ω
			T_A = T_{MIN} to T_{MAX}			0.4	
On-Resistance Flatness (Note 3)	R_{FLAT}	V+ = 4.5V, I_{COM} = 10mA, V_{NO} or V_{NC} = 0 to V+	T_A = +25°C		0.75	1	Ω
			T_A = T_{MIN} to T_{MAX}			1.2	
NO, NC Off-Leakage Current (Note 4)	$I_{NO(OFF)}$, $I_{NC(OFF)}$	V+ = 5.5V, V_{COM} = 1V or 4.5V, V_{NO} or V_{NC} = 4.5V or 1V	T_A = +25°C	-0.25	0.01	0.25	nA
			T_A = T_{MIN} to T_{MAX}	-0.35		0.35	
COM Off-Leakage Current (Note 4)	$I_{COM(OFF)}$	V+ = 5.5V, V_{COM} = 1V or 4.5V, V_{NO} or V_{NC} = 4.5V or 1V	T_A = +25°C	-0.25	0.01	0.25	nA
			T_A = T_{MIN} to T_{MAX}	-0.35		0.35	
COM On-Leakage Current (Notes 4, 5)	$I_{COM(ON)}$	V+ = 5.5V, V_{COM} = 1V or 4.5V	T_A = +25°C	-0.25	0.01	0.25	nA
			T_A = T_{MIN} to T_{MAX}	-0.35		0.35	
DIGITAL INPUTS							
Input-Logic High	V_{IH}			2.4			V
Input-Logic Low	V_{IL}					0.8	V
Input Current	I_{IN}	V_{IN} = 0.8V or 2.4V		-0.1	0.005	0.1	μA

ELECTRICAL CHARACTERISTICS —Single +5V Supply (continued)

(V+ = +4.5V to +5.5V, V_{INH} = 2.4V, V_{INL} = 0.8V, T_A = T_{MIN} to T_{MAX}, unless otherwise noted. Typical values are at T_A = +25°C.)

PARAMETER	SYMBOL	CONDITIONS		MIN	TYP	MAX	UNITS
DYNAMIC							
Turn-On Time (Note 4)	t_{ON}	R_L = 300Ω; C_L = 35pF; V_{NO}, V_{NC} = 3V; Figure 2	T_A = +25°C		11	15	ns
			T_A = T_{MIN} to T_{MAX}			18	
Turn-Off Time (Note 4)	t_{OFF}	R_L = 300Ω; C_L = 35pF; V_{NO}, V_{NC} = 3V; Figure 2	T_A = +25°C		3	5	ns
			T_A = T_{MIN} to T_{MAX}			6	
Break-Before-Make (Note 4)	t_{BBM}	R_L = 300Ω; C_L = 35pF; V_{NO} or V_{NC} = +3V; Figure 2	T_A = +25°C		8		ns
			T_A = T_{MIN} to T_{MAX}	1			
Charge Injection	Q	V_{GEN} = 0V, R_{GEN} = 0V, C_L = 1nF, Figure 4			5		pC
NO, NC Off-Capacitance	$C_{NO(OFF)}$, $C_{NC(OFF)}$	NO or NC = GND, f = 1MHz, Figure 5			12		pF
Switch On-Capacitance	$C_{(ON)}$	f = 1MHz, Figure 5			34		pF
Off-Isolation (Note 6)	V_{ISO}	C_L = 5pF, R_L = 50Ω, Figure 3	f = 10MHz		-55		dB
			f = 1MHz		-80		
Crosstalk (Note 7)	V_{CT}	C_L = 5pF, R_L = 50Ω, Figure 3	f = 10MHz		-62		dB
			f = 1MHz		-82		
Total Harmonic Distortion	THD	R_L = 600Ω, 0.5Vp-p, f = 20Hz to 20kHz			0.018		%
SUPPLY							
Positive Supply Current	I+	V+ = 5.5V, V_{IN} = 0V or V+			0.001	1.0	µA

ELECTRICAL CHARACTERISTICS—Single +3V Supply

(V+ = +2.7V to +3.3V, V_{INH} = 2.0V, V_{INL} = 0.4V, T_A = T_{MIN} to T_{MAX}, unless otherwise noted. Typical values are at T_A = +25°C.)

PARAMETER	SYMBOL	CONDITIONS		MIN	TYP	MAX	UNITS
ANALOG SWITCH							
Analog-Signal Range	V_{COM}, V_{NO}, V_{NC}			0		V+	V
On-Resistance	R_{ON}	V+ = 2.7V, I_{COM} = 10mA, V_{NO} or V_{NC} = 0 to V+	T_A = +25°C		6	8	Ω
			T_A = T_{MIN} to T_{MAX}			9	
On-Resistance Match Between Channels (Note 2)	ΔR_{ON}	V+ = 2.7V, I_{COM} = 10mA, V_{NO} or V_{NC} = 0 to V+	T_A = +25°C		0.1		Ω
			T_A = T_{MIN} to T_{MAX}			0.4	
On-Resistance Flatness (Note 3)	R_{FLAT}	V+ = 2.7V, I_{COM} = 10mA, V_{NO} or V_{NC} = 0 to V+	T_A = +25°C		1.5	3	Ω
			T_A = T_{MIN} to T_{MAX}			3.5	

High-Speed, Low-Voltage, 4Ω, SPDT CMOS Analog Switch

ELECTRICAL CHARACTERISTICS—Single +3V Supply (continued)

(V+ = +2.7V to +3.3V, V_{INH} = 2.0V, V_{INL} = 0.4V, T_A = T_{MIN} to T_{MAX}, unless otherwise noted. Typical values are at T_A = +25°C.)

PARAMETER	SYMBOL	CONDITIONS		MIN	TYP	MAX	UNITS
DIGITAL INPUTS							
Input-Logic High	V_{IH}			2.0			V
Input-Logic Low	V_{IL}					0.4	V
Input Current	I_{IN}	V_{IN} = 0.4V or 2.0V		-0.1	0.005	0.1	µA
DYNAMIC							
Turn-On Time (Note 4)	t_{ON}	R_L = 300Ω; C_L = 35pF; V_{NO}, V_{NC} = 2V; Figure 2	T_A = +25°C		14	20	ns
			T_A = T_{MIN} to T_{MAX}			22	
Turn-Off Time (Note 4)	t_{OFF}	R_L = 300Ω; C_L = 35pF; V_{NO}, V_{NC} = 2V; Figure 2	T_A = +25°C		4	7.5	ns
			T_A = T_{MIN} to T_{MAX}			8	
Break-Before-Make (Note 4)	t_{BBM}	R_L = 300Ω; C_L = 35pF; V_{NO}, V_{NC} = 2V; Figure 2	T_A = +25°C		8		ns
			T_A = T_{MIN} to T_{MAX}	1			
Charge Injection	Q	V_{GEN} = 0V, R_{GEN} = 0V, C_L = 1nF, Figure 4			5		pC
NO, NC Off-Capacitance	$C_{NO(OFF)}$, $C_{NC(OFF)}$	NO or NC = GND, f = 1MHz, Figure 5			12		pF
Switch On-Capacitance	$C_{(ON)}$	f = 1MHz, Figure 5			34		pF
Off-Isolation (Note 6)	V_{ISO}	C_L = 5pF, R_L = 50Ω, Figure 3	f = 10MHz		-55		dB
			f = 1MHz		-80		
Crosstalk (Note 7)	V_{CT}	C_L = 5pF, R_L = 50Ω, Figure 3	f = 10MHz		-62		dB
			f = 1MHz		-82		
SUPPLY							
Positive Supply Current	I+	V+ = 3.3V, V_{IN} = 0V or V+			0.001	1.0	µA

Note 2: $\Delta R_{ON} = R_{ON(MAX)} - R_{ON(MIN)}$.
Note 3: R_{ON} flatness is defined as the difference between the maximum and minimum value of on-resistance as measured over the specified analog-signal range.
Note 4: Guaranteed by design.
Note 5: On-Leakage performed with voltage applied to COM, with NO and NC left unconnected.
Note 6: Off-Isolation = $20\log_{10} (V_O / V_I)$, where V_O is V_{COM} and V_I is either V_{NC} or V_{NO} from the network analyzer.
Note 7: Crosstalk is measured between the two switches.

Typical Operating Characteristics

(V+ = +5V or +3V, V_{INH} = V+, INL = GND, T_A = +25°C, unless otherwise noted.)

ON-RESISTANCE vs. V_{COM}

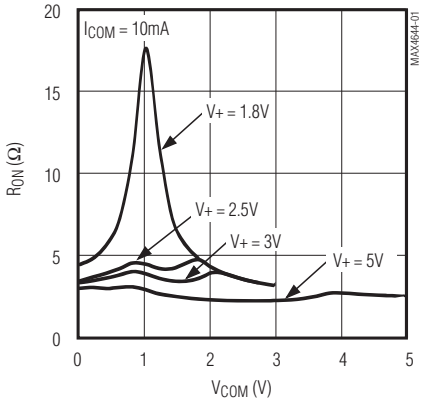

ON-RESISTANCE vs. TEMPERATURE

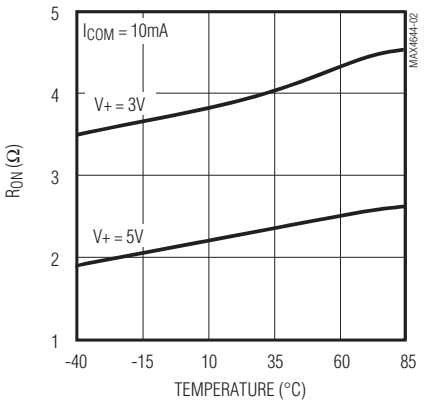

ON-/OFF-LEAKAGE CURRENT vs. TEMPERATURE

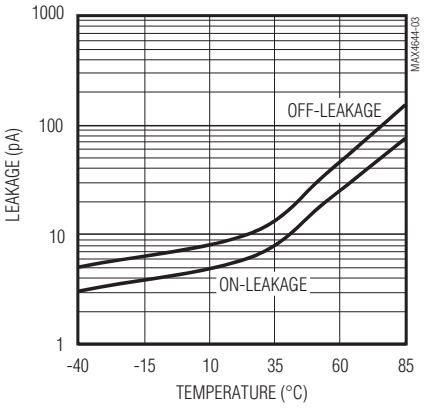

CHARGE INJECTION vs. V_{COM}

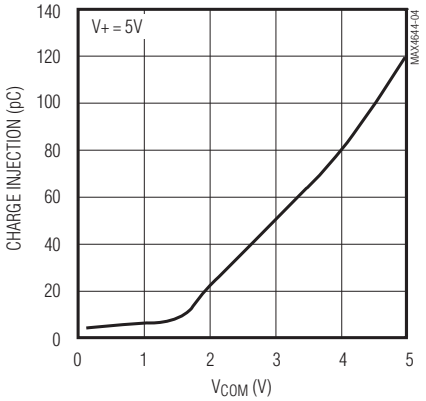

SUPPLY CURRENT vs. SUPPLY VOLTAGE

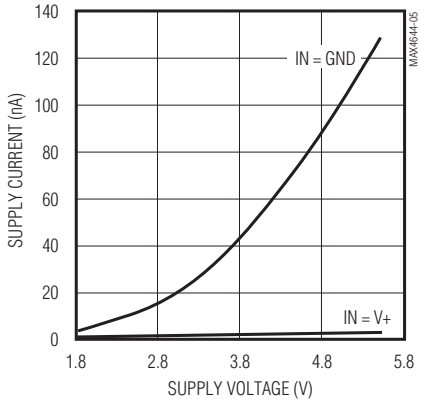

SUPPLY CURRENT vs. TEMPERATURE

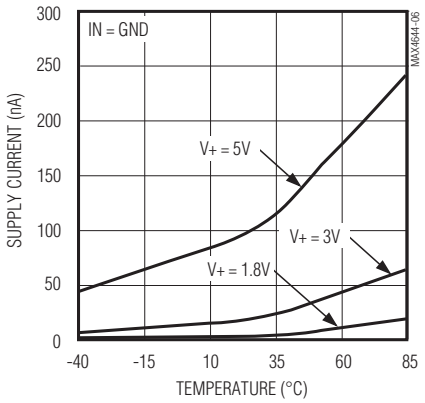

LOGIC THRESHOLD vs. SUPPLY VOLTAGE

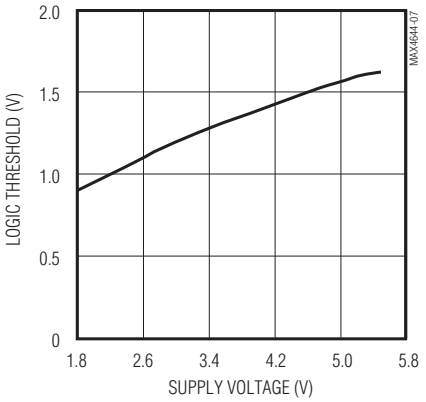

SWITCHING TIMES vs. SUPPLY VOLTAGE

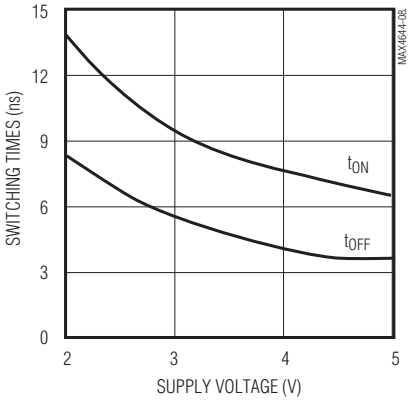

SWITCHING TIMES vs. TEMPERATURE

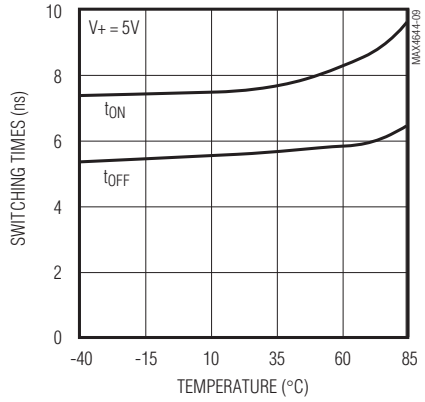

High-Speed, Low-Voltage, 4Ω, SPDT CMOS Analog Switch

Typical Operating Characteristics (continued)

(V+ = +5V or +3V, V_{INH} = V+, INL = GND, T_A = +25°C, unless otherwise noted.)

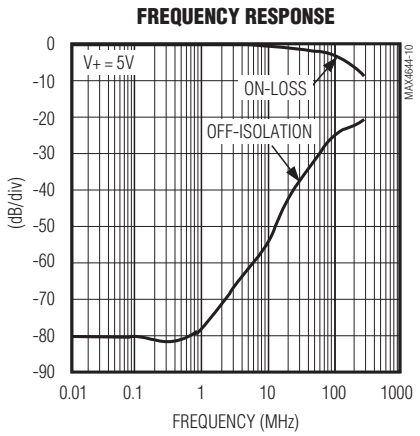

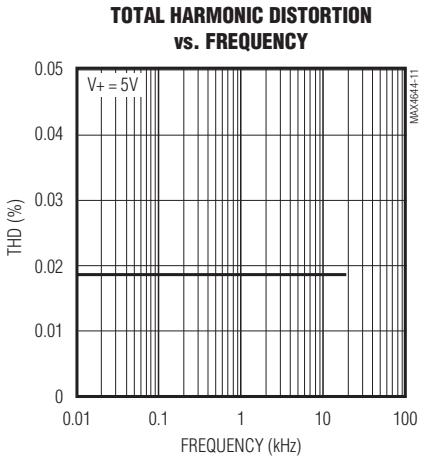

Pin Description

MAX4644		NAME	FUNCTION
SOT23	µMAX		
1	6	IN	Logic-Controlled Input
2	4	V+	Positive Supply Voltage Input. Bypass with a 0.1µF capacitor to GND.
3	3	GND	Ground
—	5, 7	N.C.	No Connection. Not internally connected.
4	2	NC	Analog-Switch Normally Closed Terminal
5	1	COM	Analog-Switch Common Terminal
6	8	NO	Analog-Switch Normally Open Terminal

Note: The switches are bidirectional, which means that a signal can be passed through either side of the on switch. However, the typical off-capacitances differ as shown in the *Electrical Characteristics.*

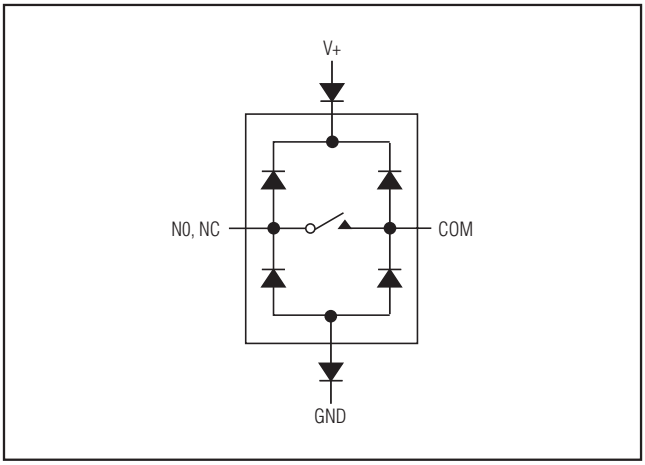

Figure 1. Overvoltage Protection Using External Blocking Diodes

Applications Information

The MAX4644 operates from a single supply ranging from +1.8V to +5.5V. The device is guaranteed to be functional over that supply range, but TTL/CMOS compatibility is only valid for operation using a +5V supply. All voltage levels are referenced to GND. Positive and negative DC analog inputs or AC signals can be accommodated by shifting V+ and GND.

ESD-protection diodes are internally connected between each analog-signal pin and both V+ and GND. One of these diodes conducts if any analog signal exceeds V+ or GND (Figure 1). Virtually all of the analog leakage current comes from the ESD diodes to V+ or GND. Although the ESD diodes on a given signal pin are identical, and therefore fairly well balanced, they are reverse biased differently. Each is biased by either V+ or GND and the analog signal. This means their leakages will vary as the signal varies. The difference in the two diode leakages to the V+ and GND pins constitutes the analog-signal-path leakage current. All analog leakage current flows between each pin and one of the supply terminals, not to the other switch terminal. This is why both sides of a given switch can show leakage currents of the same or opposite polarity.

There is no normal current path between the analog-signal paths and V+ or GND. V+ and GND also power the internal logic and logic-level translators. The logic-level translators convert the logic level into switched V+ and GND signals to drive the analog signal gates.

Chip Information

PROCESS: BiCMOS

Package Information

For the latest package outline information and land patterns (footprints), go to **www.maxim-ic.com/packages**. Note that a "+", "#", or "-" in the package code indicates RoHS status only. Package drawings may show a different suffix character, but the drawing pertains to the package regardless of RoHS status.

PACKAGE TYPE	PACKAGE CODE	OUTLINE NO.	LAND PATTERN NO.
6 SOT23	U6+4	21-0058	90-0175
8 μMAX	U8+1	21-0036	90-0092

High-Speed, Low-Voltage, 4Ω, SPDT CMOS Analog Switch

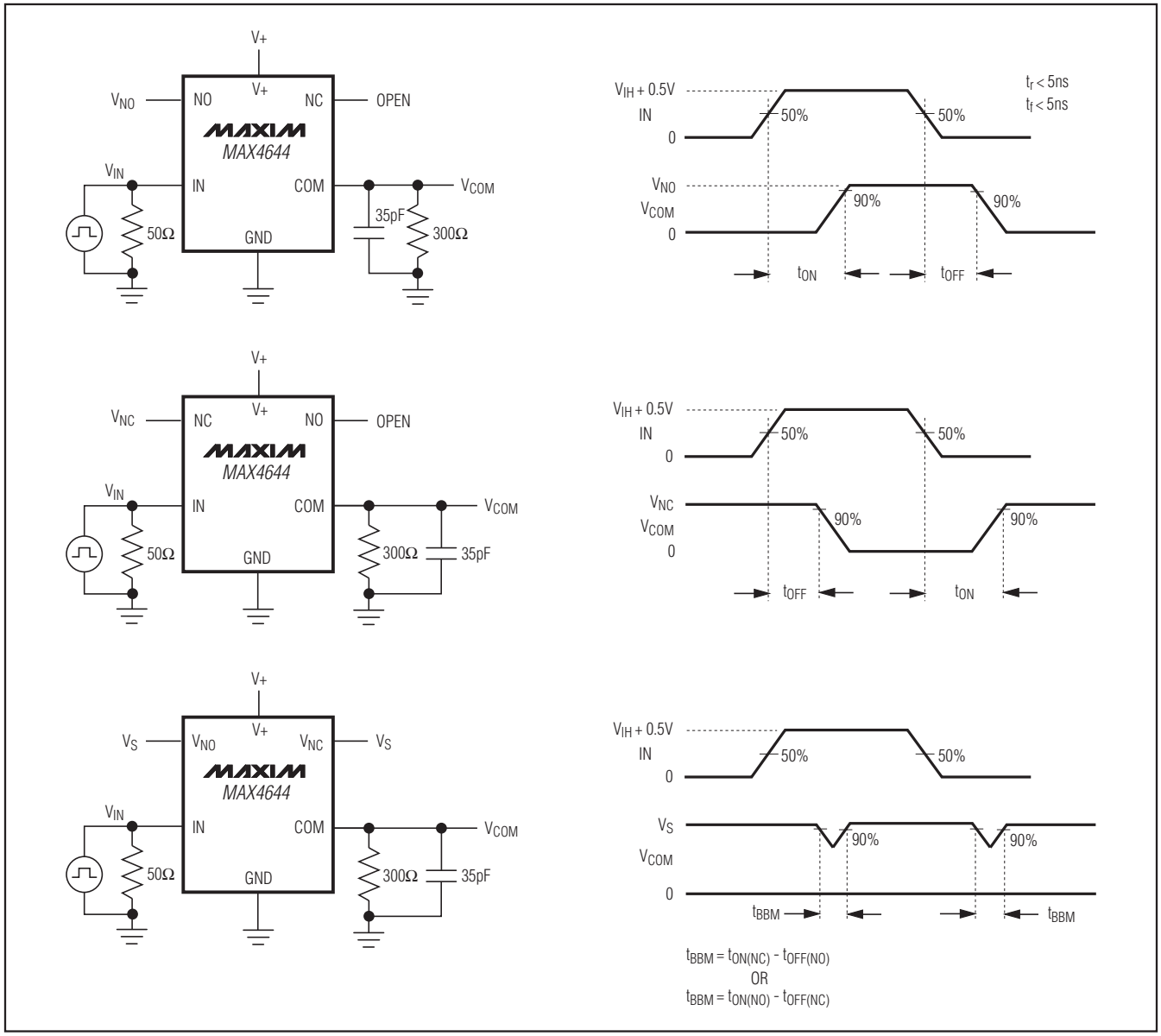

Figure 2. Switching Times

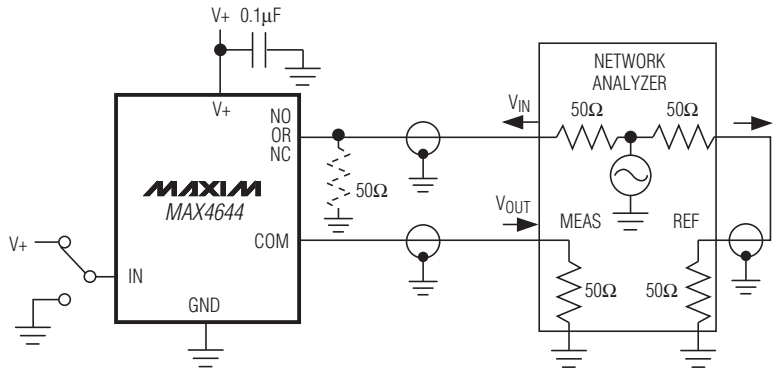

MEASUREMENTS ARE STANDARDIZED AGAINST SHORT AT SOCKET TERMINALS. OFF-ISOLATION IS MEASURED BETWEEN COM AND "OFF" TERMINAL ON EACH SWITCH. ON-LOSS IS MEASURED BETWEEN COM AND "ON" TERMINAL ON EACH SWITCH. SIGNAL DIRECTION THROUGH SWITCH IS REVERSED; WORST VALUES ARE RECORDED.

$$\text{OFF-ISOLATION} = 20\log \frac{V_{OUT}}{V_{IN}}$$

$$\text{ON-LOSS} = 20\log \frac{V_{OUT}}{V_{IN}}$$

Figure 3. Off-Isolation and On-Loss

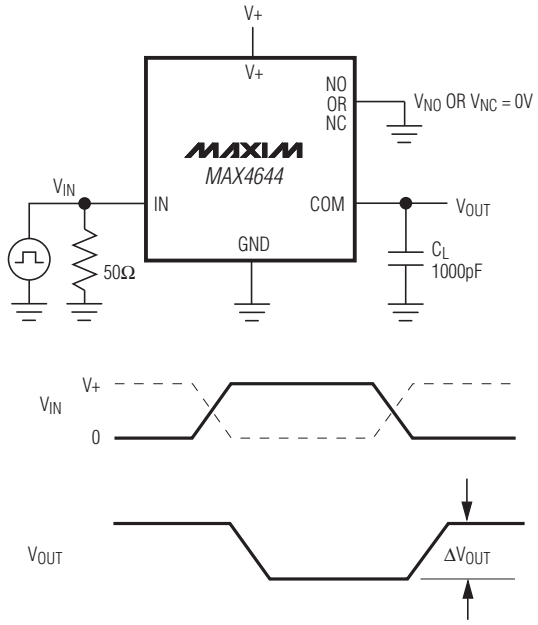

ΔV_{OUT} IS THE MEASURED VOLTAGE DUE TO CHARGE TRANSFER ERROR Q WHEN THE CHANNEL TURNS OFF.

$Q = \Delta V_{OUT} \times C_L$

Figure 4. Charge Injection

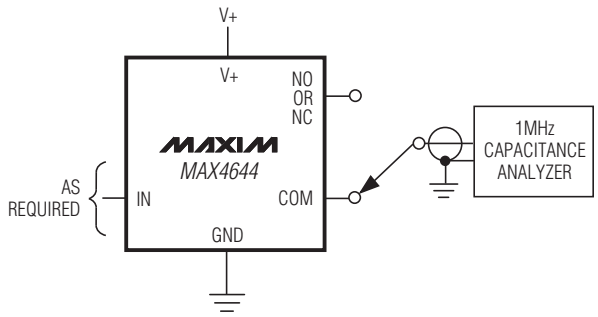

Figure 5. NO, NC, and COM Capacitance

High-Speed, Low-Voltage, 4Ω, SPDT CMOS Analog Switch

Revision History

REVISION NUMBER	REVISION DATE	DESCRIPTION	PAGES CHANGED
0	3/00	Initial release	—
1	1/11	Added lead-free parts to the *Ordering Information* table	1

Maxim cannot assume responsibility for use of any circuitry other than circuitry entirely embodied in a Maxim product. No circuit patent licenses are implied. Maxim reserves the right to change the circuitry and specifications without notice at any time.

© 2011 Maxim Integrated Products Maxim is a registered trademark of Maxim Integrated Products, Inc.