DO NOT SCALE
DIMENSIONS IN m.m.

METRIC

3rd ANGLE PROJECTION

SHEET of

DWG. NO. C342702

No OF WAYS	No OF POSITIONS	BLANK POSITIONS	HOUSING COLOURS NATURAL	BLACK	RED	GREY (6)	YELLOW	GREEN	BLUE	DIMENSION 'X'	DIMENSION 'Y'	
2	2	NONE	~~342702-1~~ (8)	~~342702-3~~ (8)	~~342702-5~~ (8)	~~342702-6~~ (8)	~~342702-7~~ (8)	~~342702-8~~ (8)	~~342702-9~~ (8)	3.96	9.86	
3	3	NONE	~~342703-1~~ (8)	~~342703-3~~ (8)	~~342703-5~~ (8)	~~342703-6~~ (8)	~~342703-7~~ (8)	~~342703-8~~ (8)	~~342703-9~~ (8)	7.92	13.82	
4	4	NONE	~~342704-1~~ (8)	~~342704-3~~ (8)	~~342704-5~~ (8)	~~342704-6~~ (8)	~~342704-7~~ (8)	~~342704-8~~ (8)	~~342704-9~~ (8)	11.88	17.80	
5	5	NONE	~~342705-1~~ (7)	~~342705-3~~ (8)	~~342705-5~~ (8)	~~342705-6~~ (8)	~~342705-7~~ (8)	~~342705-8~~ (8)	~~342704-9~~ (8)	15.85	21.75	
6	6	NONE	~~342706-1~~ (8)	~~342706-3~~ (8)	~~342706-5~~ (8)	~~342706-6~~ (8)	~~342706-7~~ (8)	~~342706-8~~ (8)	~~342706-9~~ (8)	19.81	25.71	
7	7	NONE	~~342707-1~~ (8)	~~342707-3~~ (8)	~~342707-5~~ (8)	~~342707-6~~ (8)	~~342707-7~~ (8)	~~342707-8~~ (8)	342707-9	23.77	29.67	
8	8	NONE	~~342708-1~~ (8)	~~342708-3~~ (8)	~~342708-5~~ (8)	~~342708-6~~ (8)	~~342708-7~~ (8)	~~342708-8~~ (8)	342708-9	27.74	33.64	
9	9	NONE	~~342709-1~~ (8)	~~342709-3~~ (8)	~~342709-5~~ (8)	~~342709-6~~ (8)	~~342709-7~~ (8)	~~342709-8~~ (8)	342709-9	31.70	37.60	
10	10	NONE	~~342710-1~~ (8)	~~342710-3~~ (8)	~~342710-5~~ (8)	~~342710-6~~ (8)	~~342710-7~~ (8)	~~342710-8~~ (8)	342710-9	35.66	41.56	
11	11	NONE	~~342711-1~~ (7)	~~342711-3~~ (7)	~~342711-5~~ (8)	~~342711-6~~ (8)	~~342711-7~~ (7)	~~342711-8~~ (7)	342711-9	39.62	45.52	
12	12	NONE	~~342712-1~~ (7)	~~342712-3~~ (8)	~~342712-5~~ (8)	~~342712-6~~ (8)	~~342712-7~~ (8)	~~342712-8~~ (8)	342712-9	43.59	49.49	
5	3	2&4				~~342722-6~~				15.85	21.75	OBSOLETE
3	2	2			~~342721-5~~ (8)					7.92	13.82	
5	3	2,4			~~342722-5~~ (8)					15.85	21.75	
7	4	2,4,6			~~342723-5~~					23.77	29.67	OBSOLETE
9	5	2,4,6,8			~~342724-5~~ (7)					31.70	37.60	
11	6	2,4,6,8,10			~~342750-5~~ (7)					39.62	45.52	
9	8	2							~~343266-9~~ (8)	31.70	37.60	

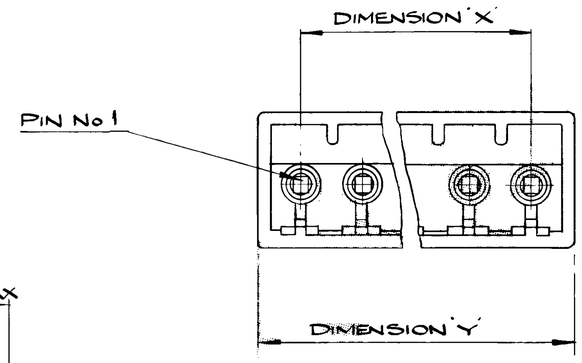

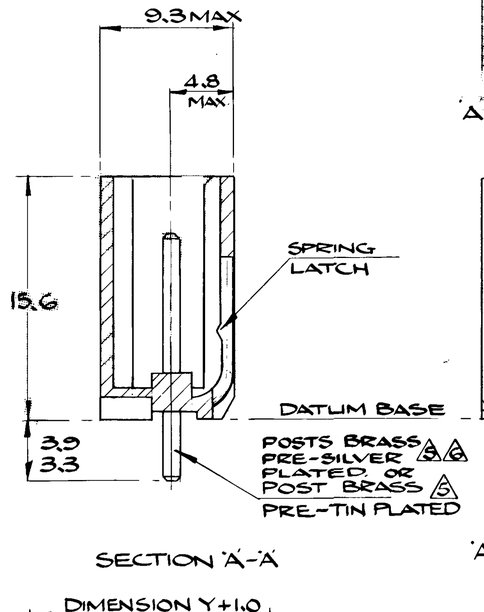

SECTION 'A'-'A'

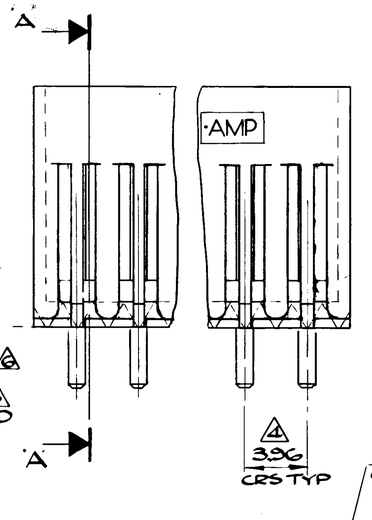

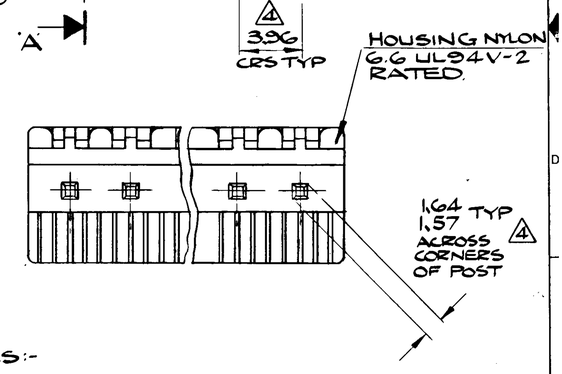

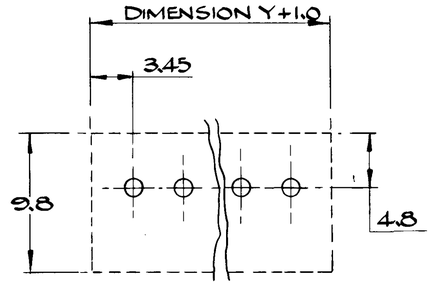

P.C.B. FOOTPRINT

NOTES:-

1. FOR LATEST ISSUE OF DRAWING CONSULT AMP ENGINEERING.
2. PERFORMANCE SPECIFICATION 108-3042.
3. MATES WITH CONNECTOR ASSEMBLIES CONFORMING TO AMP SPEC 108-19045
4. AS MEASURED AT DATUM BASE
5. POST TO CONFORM TO SOLDERABILITY SPEC BS 2011 PART 2.1T 1981 (IEC68-2-20) SOLDER BATH DWELL TIME NOT TO EXCEED 3 SECS. AT A TEMP. OF 250° C MAX.
6. GREY VERSION WITH SILVER PLATED POSTS ONLY.
7. OBSOLETE PARTS: OBSOLETE CIS STREAMLINING PER D.RENAUD/D.SINISI
8. OBSOLETE

OTHER TREATMENT	FINISH	MATERIAL	PART NUMBER
—	—	—	—

CUSTOMER DWG FOR REFERENCE ONLY

[redacted] RELEASED FOR PUBLICATION 27 SEPT. 1983

© COPYRIGHT 1983 BY AMP of GREAT BRITAIN LTD. ALL INTERNATIONAL RIGHTS RESERVED. AMP PRODUCTS MAY BE COVERED BY BRITISH AND FOREIGN PATENTS AND/OR PATENTS PENDING.

TOLERANCES UNLESS OTHERWISE STATED:-
DEC ± 0.5
ANGLES ± 1°

INS. DIA. RANGE | WIRE RANGE | SCALE 5:1

TE Connectivity

NAME MT6 FULLY SHROUDED POST HEADER

DR. D.R.TERRY
CHK. 27/9/83
APP.

ISS	REVISION RECORD	DR	DATE
E3	REVISED PER ECO-11-016136	MHM	08AUG11

A1 | LOC. E | DWG. NO. C342702 | SHEET of

AARQUE 7675/82