UNCONTROLLED DOCUMENT

PART NUMBER
LDF-U8004BI

REV.

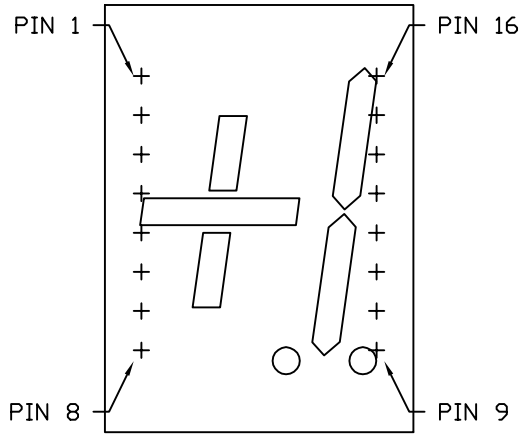

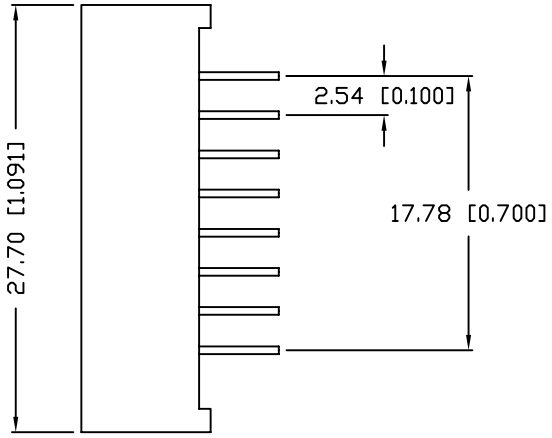

ELECTRO-OPTICAL CHARACTERISTICS T_A=25°C I_f=10mA

PARAMETER	MIN	TYP	MAX	UNITS	TEST COND
PEAK WAVELENGTH		635		nm	
FORWARD VOLTAGE		2.1	2.5	V_f	
REVERSE VOLTAGE	5.0			V_r	I_r=100μA
AXIAL INTENSITY		4000		μcd	I_f=10mA
EMITTED COLOR:	RED				
FACE COLOR:	GRAY				
SEGMENT COLOR:	MILKY WHITE DIFFUSED				

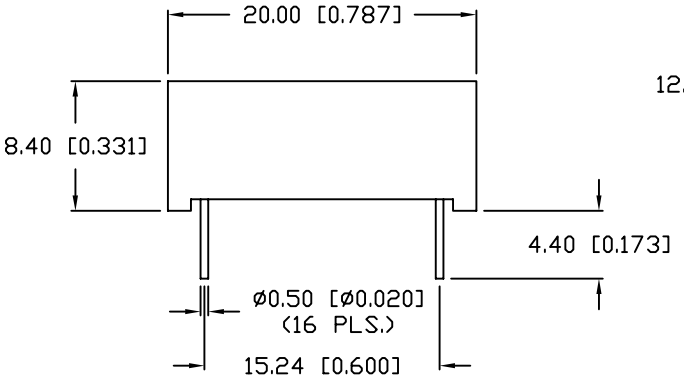

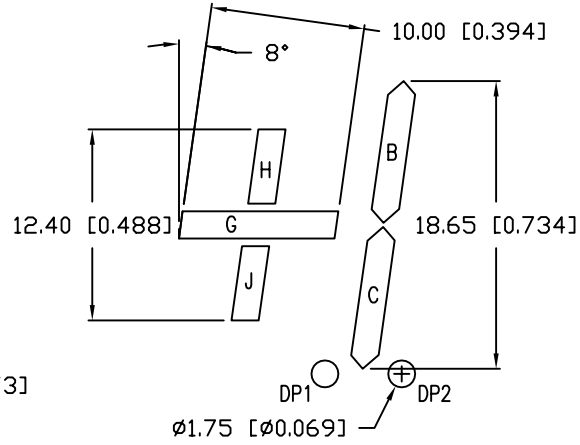

LIMITS OF SAFE OPERATION AT 25°C PER DIE

PARAMETER	MAX	UNITS
PEAK FORWARD CURRENT*	150	mA
STEADY CURRENT	30	mA
POWER DISSIPATION	105	mW
DERATE FROM 25°C	−1.2	mW/°C
OPERATING, STORAGE TEMP.	−40 TO +85	°C
SOLDERING TEMP.	+260	°C
2.0mm FROM BODY		3 SEC. MAX

* t<10μS

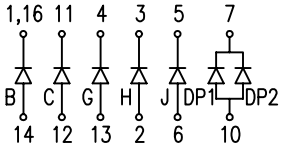

8, 9, 15 NO PIN

UNCONTROLLED DOCUMENT

*UNLESS OTHERWISE SPECIFIED TOLERANCES PER DECIMAL PRECISION ARE: X=±1 (±0.039), X.X=±0.5 (±0.020), X.XX=±0.25 (±0.010), X.XXX=±0.127 (±0.005). LEAD SIZE=±0.05 (±0.002), LEAD LENGTH=±0.75 (±0.030). MIN= +DECIMAL PRECISION −0.00 MAX.= +0.00 −DECIMAL PRECISION

REV.

PART NUMBER
LDF-U8004BI

635nm HIGH INTENSITY RED DISPLAY,
GRAY FACE, WHITE SEGMENTS.

CONFIDENTIAL INFORMATION
THE INFORMATION CONTAINED IN THIS DOCUMENT IS THE PROPERTY OF LUMEX INC. EXCEPT AS SPECIFICALLY AUTHORIZED IN WRITING BY LUMEX INC., THE HOLDER OF THIS DOCUMENT SHALL KEEP ALL INFORMATION CONTAINED HEREIN CONFIDENTIAL AND SHALL PROTECT SAME IN WHOLE OR IN PART FROM DISCLOSURE AND DISSEMINATION TO ALL THIRD PARTIES.

RELIABILITY NOTE
OUR MANY YEARS OF EXPERIENCE DATA ACCUMULATION INDICATE THAT SOLDER HEAT IS A MAJOR CAUSE OF EARLY AND FUTURE FAILURE. PLEASE PAY ATTENTION TO YOUR SOLDERING PROCESS.

LUMEX
Creating LED and LCD Solutions Together™
290 E. HELEN ROAD
PALATINE, IL 60067-6976
PHONE: +1.847.359.2790
US WEB: www.lumex.com
TW WEB: www.lumex.com.tw

DRAWN BY:	CHECKED BY:	APPROVED BY:	DATE: 1.8.01
CT	YA	YA	PAGE: 1 OF 1
			SCALE: N/A