PART NAME	PI SERIES - ABS MOLDED ENCLOSURE	PART No.	PI-1906 THRU PI-1908 PI-1906-LG THRU PI-1908-LG

MATERIAL & FINISH:
(NO SUFFIX) DARK GRAY HIGH-IMPACT ABS (UL94-V0) - TOP & BOTTOM
LIGHT GRAY HIGH-IMPACT ABS (UL94-V0) - END PANELS
(SUFFIX -LG) LIGHT GRAY HIGH-IMPACT ABS - TOP & BOTTOM
DARK GRAY HIGH-IMPACT ABS - END PANELS

FOUR (4) RUBBER SELF-ADHESIVE FEET SUPPLIED.

FOUR (4) M3 x (N") LG. SCREWS SUPPLIED FOR ASSEMBLY.

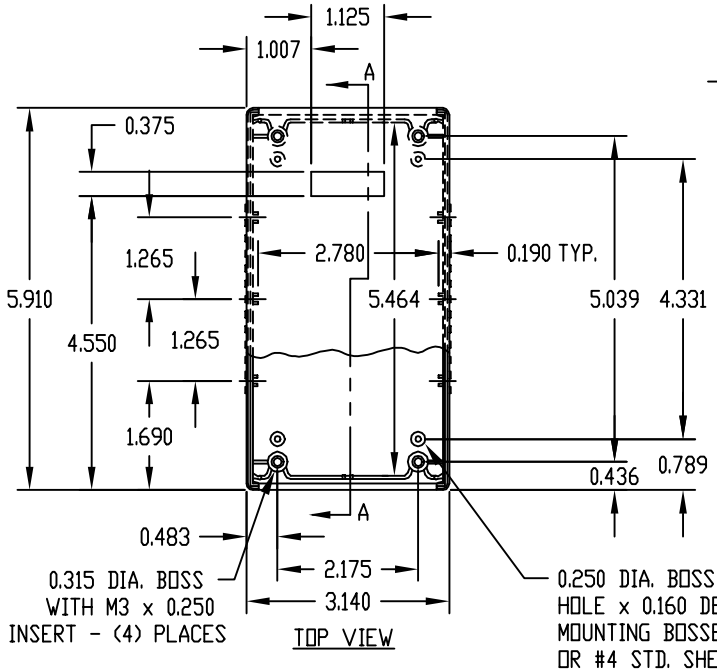

TOP VIEW

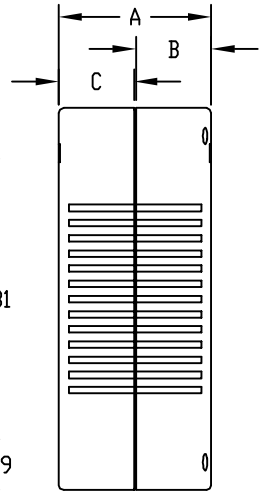

SIDE VIEW

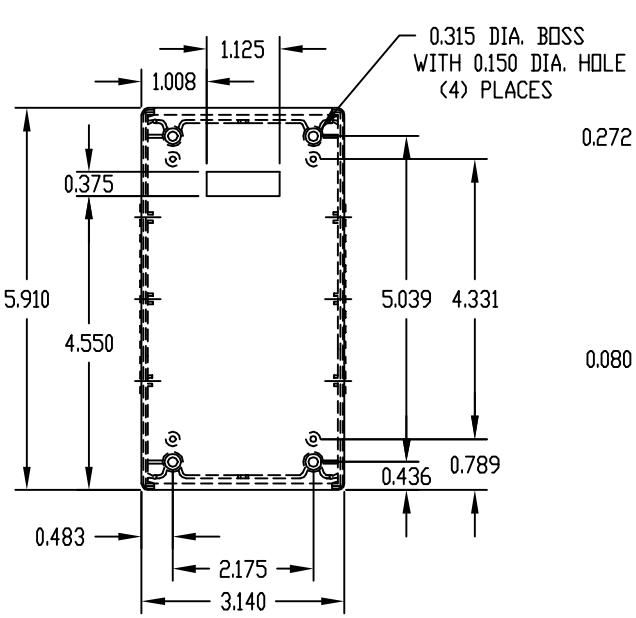

BOTTOM VIEW

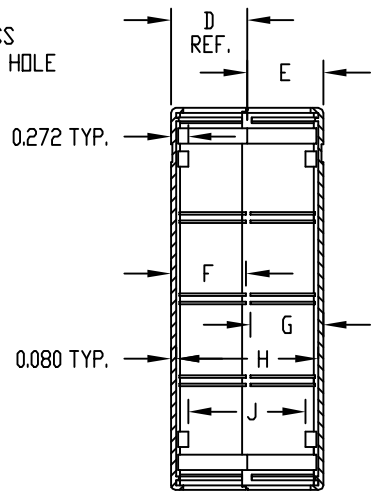

SECTION "A-A"

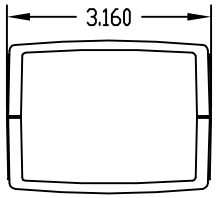

END VIEW

NOTE: ALL DIMENSIONS HAVE ±0.015 TOLERANCE UNLESS OTHERWISE SPECIFIED.

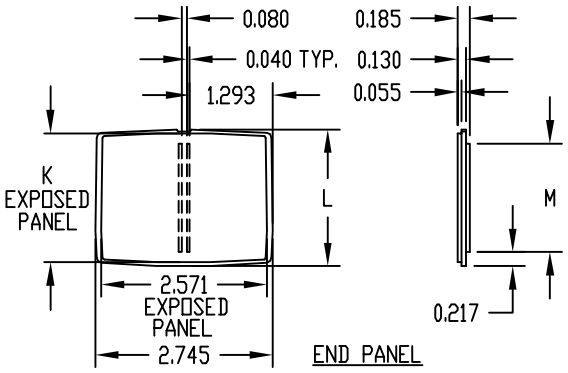

END PANEL

PART No.	A	B	C	D	E	F	G	H	J	K	L	M	N
PI-1906	1.180	0.575	0.575	0.610	0.610	0.565	0.565	1.020	0.636	0.725	0.935	0.490	0.980
PI-1907	1.770	1.165	0.575	1.180	0.610	1.155	0.565	1.610	1.226	1.315	1.525	1.080	0.790
PI-1908	2.360	1.165	1.165	1.180	1.180	1.155	1.155	2.200	1.816	1.910	2.115	1.665	1.378