NEW PRODUCT

DSS5160U

LOW $V_{CE(SAT)}$ PNP SURFACE MOUNT TRANSISTOR

Please click here to visit our online spice models database.

Features

- Epitaxial Planar Die Construction
- Low Collector-Emitter Saturation Voltage, $V_{CE(SAT)}$
- Complementary NPN Type Available (DSS4160U)
- Ultra-Small Surface Mount Package
- **Lead Free By Design/RoHS Compliant (Note 1)**
- **"Green Device" (Note 2)**

Mechanical Data

- Case: SOT-323
- Case Material: Molded Plastic, "Green" Molding Compound. UL Flammability Classification Rating 94V-0
- Moisture Sensitivity: Level 1 per J-STD-020D
- Terminals: Finish — Matte Tin annealed over Copper Plated Alloy 42 leadframe. Solderable per MIL-STD-202, Method 208
- Terminal Connections: See Diagram
- Marking Information: See Page 4
- Ordering Information: See Page 4
- Weight: 0.006 grams (approximate)

Top View

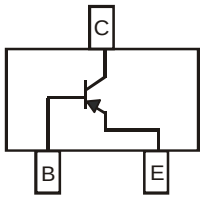

Device Schematic

Maximum Ratings @T_A = 25°C unless otherwise specified

Characteristic	Symbol	Value	Unit
Collector-Base Voltage	V_{CBO}	-80	V
Collector-Emitter Voltage	V_{CEO}	-60	V
Emitter-Base Voltage	V_{EBO}	-5	V
Collector Current - Continuous	I_C	-1	A
Peak Pulse Collector Current	I_{CM}	-2	A
Base Current (DC)	I_B	-300	mA
Peak Base Current	I_{BM}	-1	A

Thermal Characteristics

Characteristic	Symbol	Value	Unit
Power Dissipation (Note 3) @ T_A = 25°C	P_D	400	mW
Thermal Resistance, Junction to Ambient (Note 3) @ T_A = 25°C	$R_{\theta JA}$	313	°C/W
Operating and Storage Temperature Range	T_J, T_{STG}	-55 to +150	°C

Notes:
1. No purposefully added lead.
2. Diode's Inc.'s "Green" policy can be found on our website at http://www.diodes.com/products/lead_free/index.php.
3. Device mounted on FR-4 PCB with minimum recommended pad layout.

© Diodes Incorporated

NEW PRODUCT

Electrical Characteristics @T_A = 25°C unless otherwise specified

Characteristic	Symbol	Min	Typ	Max	Unit	Test Condition
OFF CHARACTERISTICS						
Collector-Base Breakdown Voltage	$V_{(BR)CBO}$	-80	—	—	V	I_C = -100μA, I_E = 0
Collector-Emitter Breakdown Voltage (Note 4)	$V_{(BR)CEO}$	-60	—	—	V	I_C = -10mA, I_B = 0
Emitter-Base Breakdown Voltage	$V_{(BR)EBO}$	-5	—	—	V	I_E = -100μA, I_C = 0
Collector Cutoff Current	I_{CBO}	—	—	-100 -50	nA μA	V_{CB} = -60V, I_E = 0 V_{CB} = -60V, I_E = 0, T_A = 150°C
Collector Cutoff Current	I_{CES}	—	—	-100	nA	V_{CE} = -60V, V_{BE} = 0
Emitter Cutoff Current	I_{EBO}	—	—	-100	nA	V_{EB} = -5V, I_C = 0
ON CHARACTERISTICS (Note 4)						
DC Current Gain	h_{FE}	200 150 100	— — —	— — —	—	V_{CE} = -5V, I_C = -1mA V_{CE} = -5V, I_C = -500mA V_{CE} = -5V, I_C = 1A
Collector-Emitter Saturation Voltage	$V_{CE(SAT)}$	— — —	— — —	-175 -180 -340	mV	I_C = -100mA, I_B = -1mA I_C = -500mA, I_B = -50mA I_C = -1A, I_B = -100mA
Collector-Emitter Saturation Resistance	$R_{CE(SAT)}$	—	—	340	mΩ	I_C = -1A, I_B = -100mA
Base-Emitter Saturation Voltage	$V_{BE(SAT)}$	—	—	-1.1	V	I_C = -1A, I_B = -50mA
Base-Emitter Turn On Voltage	$V_{BE(ON)}$	—	—	-0.9	V	V_{CE} = 5V, I_C = 1A
SMALL SIGNAL CHARACTERISTICS						
Output Capacitance	C_{obo}	—	—	15	pF	V_{CB} = -10V, f = 1.0MHz
Current Gain-Bandwidth Product	f_T	150	—	—	MHz	V_{CE} = -10V, I_C = -50mA, f = 100MHz
SWITCHING CHARACTERISTICS						
Turn-On Time	t_{on}	—	75	—	ns	V_{CC} = -10V I_C = -0.5A, I_{B1} = I_{B2} = -25mA
Delay Time	t_d	—	35	—	ns	
Rise Time	t_r	—	40	—	ns	
Turn-Off Time	t_{off}	—	265	—	ns	
Storage Time	t_s	—	230	—	ns	
Fall Time	t_f	—	35	—	ns	

Notes: 4. Measured under pulsed conditions. Pulse width = 300μs. Duty cycle ≤2%.

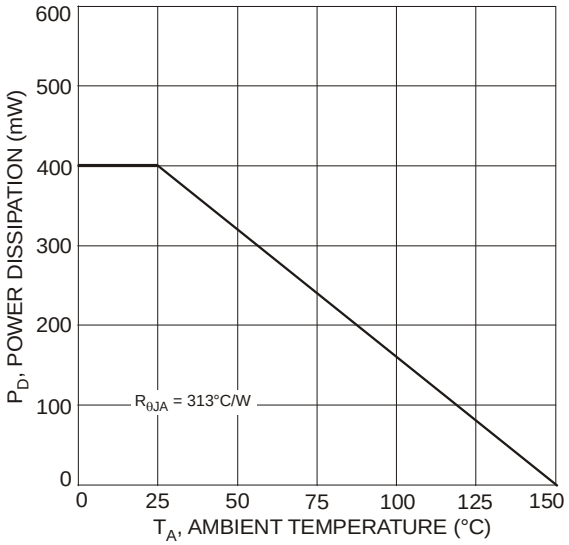

Fig. 1 Power Dissipation vs. Ambient Temperature (Note 3)

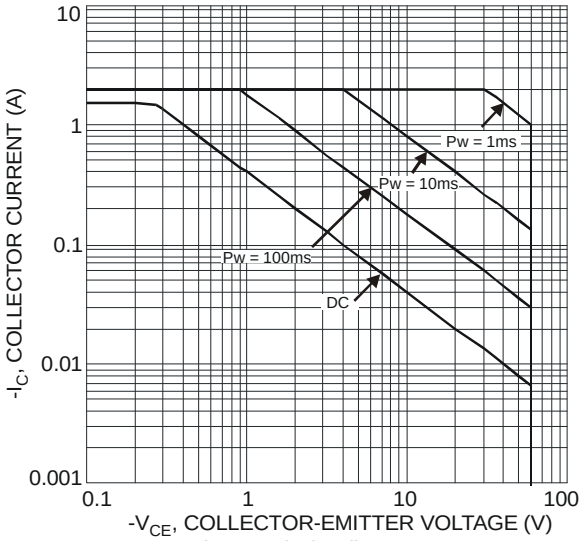

Fig. 2 Typical Collector Current vs. Collector-Emitter Voltage (Note 3)

© Diodes Incorporated

NEW PRODUCT

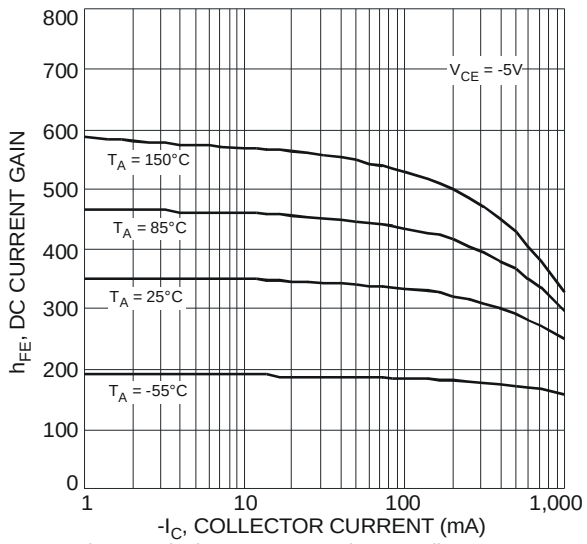

Fig. 3 Typical DC Current Gain vs. Collector Current

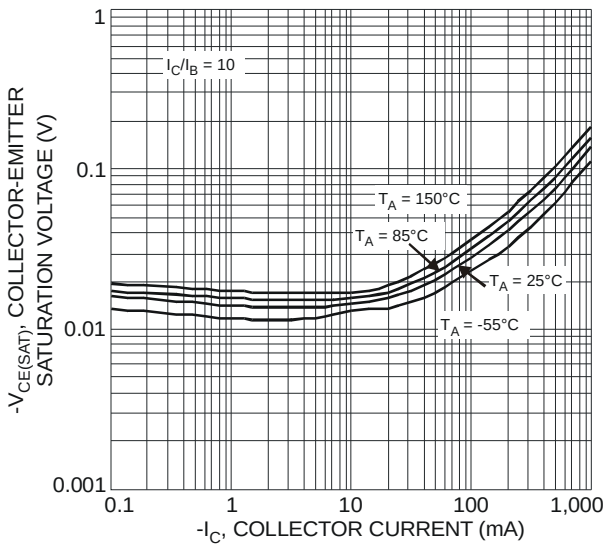

Fig. 4 Typical Collector-Emitter Saturation Voltage vs. Collector Current

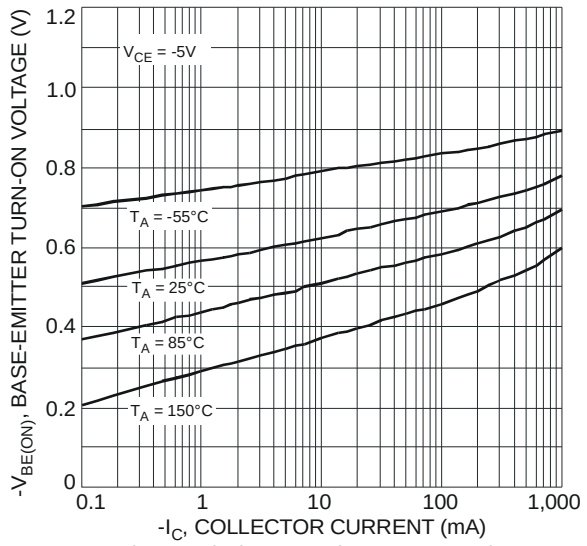

Fig. 5 Typical Base-Emitter Turn-On Voltage vs. Collector Current

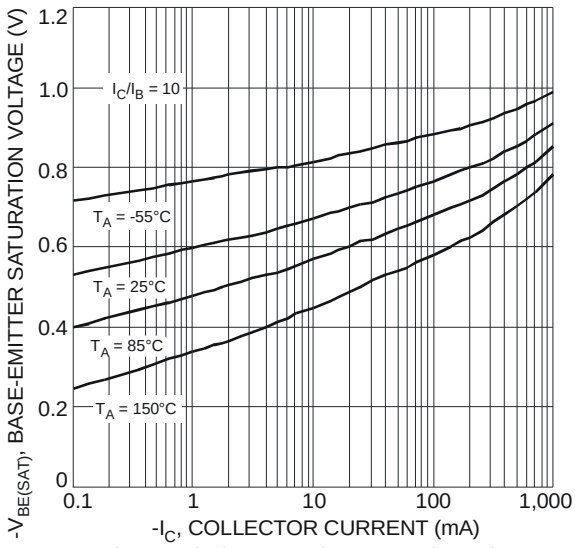

Fig. 6 Typical Base-Emitter Saturation Voltage vs. Collector Current

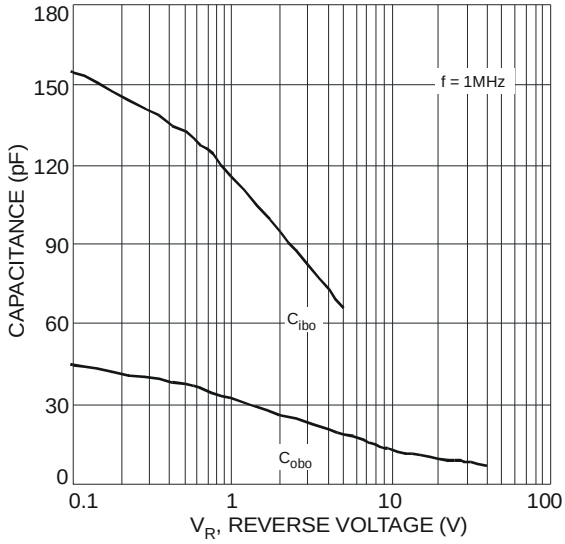

Fig. 7 Typical Capacitance Characteristics

© Diodes Incorporated

NEW PRODUCT

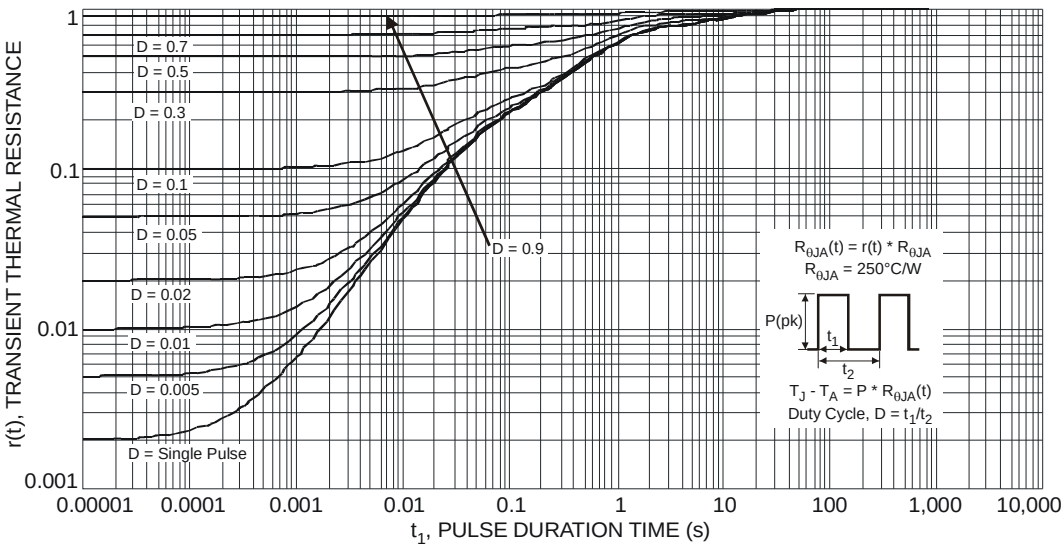

Fig. 8 Transient Thermal Response (Note 3)

Ordering Information (Note 5)

Part Number	Case	Packaging
DSS5160U-7	SOT-323	3000/Tape & Reel

Notes: 5. For packaging details, go to our website at http://www.diodes.com/datasheets/ap02007.pdf.

Marking Information

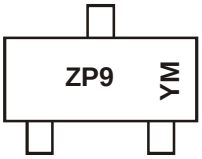

ZP9 = Product Type Marking Code
YM = Date Code Marking
Y = Year (ex: V = 2008)
M = Month (ex: 9 = September)

Date Code Key

Year	2008	2009	2010	2011	2012	2013	2014	2015
Code	V	W	X	Y	Z	A	B	C

Month	Jan	Feb	Mar	Apr	May	Jun	Jul	Aug	Sep	Oct	Nov	Dec
Code	1	2	3	4	5	6	7	8	9	O	N	D

Package Outline Dimensions

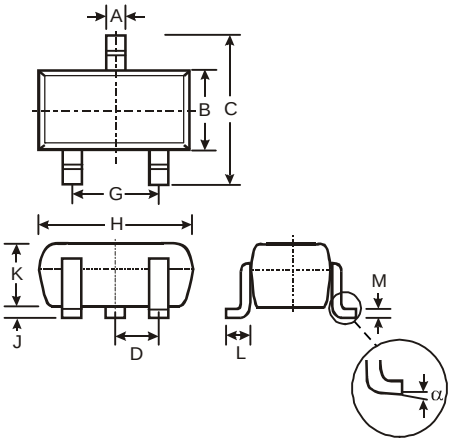

SOT-323			
Dim	Min	Max	Typ
A	0.25	0.40	0.30
B	1.15	1.35	1.30
C	2.00	2.20	2.10
D	-	-	0.65
G	1.20	1.40	1.30
H	1.80	2.20	2.15
J	0.0	0.10	0.05
K	0.90	1.00	1.00
L	0.25	0.40	0.30
M	0.10	0.18	0.11
α	0°	8°	-
All Dimensions in mm			

© Diodes Incorporated

NEW PRODUCT

Suggested Pad Layout

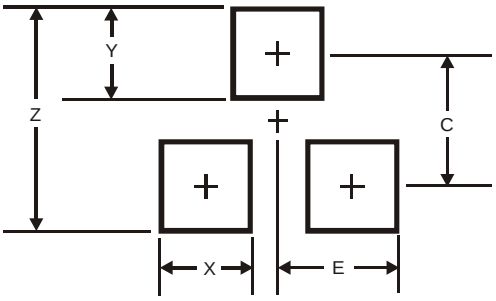

Dimensions	Value (in mm)
Z	2.8
X	0.7
Y	0.9
C	1.9
E	1.0

IMPORTANT NOTICE

Diodes Incorporated and its subsidiaries reserve the right to make modifications, enhancements, improvements, corrections or other changes without further notice to any product herein. Diodes Incorporated does not assume any liability arising out of the application or use of any product described herein; neither does it convey any license under its patent rights, nor the rights of others. The user of products in such applications shall assume all risks of such use and will agree to hold Diodes Incorporated and all the companies whose products are represented on our website, harmless against all damages.

LIFE SUPPORT

Diodes Incorporated products are not authorized for use as critical components in life support devices or systems without the expressed written approval of the President of Diodes Incorporated.

© Diodes Incorporated