Part Number: 55659-2819
Status: Active
Overview: Mini Mi II™ Wire Harness
Description: 1.25mm Pitch Mini Mi II™ Wire-to-Wire Adapter, Dual Row, 28 Circuits, Lead-Free

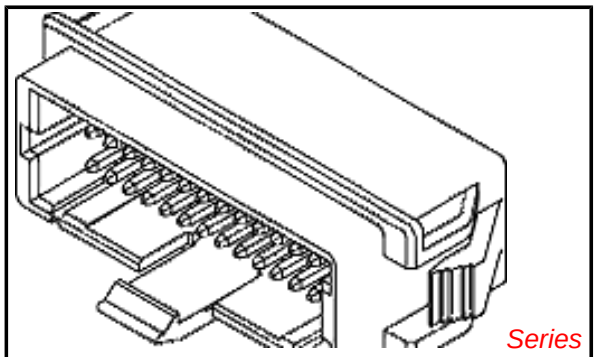

image - Reference only

Documents:
3D Model
Drawing (PDF)
Product Specification PS-55659-005 (PDF)
RoHS Certificate of Compliance (PDF)

General

Product Family	Accessories
Series	55659
Comments	For Panel Mounting
Component Type	Adapter
Overview	Mini Mi II™ Wire Harness
Product Name	Mini Mi II™
UPC	822348139927

Physical

Circuits (Loaded)	28
Color - Resin	Natural
Gender	Male
Material - Metal	Brass
Material - Plating Mating	Tin
Material - Plating Termination	Tin
Material - Resin	Nylon
Net Weight	1480.700/mg
Number of Rows	2
Packaging Type	Bag
Plating min - Mating	1.016µm
Plating min - Termination	1.016µm
Temperature Range - Operating	-20°C to +80°C

Electrical

Current - Maximum per Contact	1.5A

Material Info

Reference - Drawing Numbers

Product Specification	PS-55659-005
Sales Drawing	SD-55659-004

EU RoHS
ELV and RoHS Compliant
REACH SVHC
Contains SVHC: No
Low-Halogen Status
Low-Halogen

China RoHS

Need more information on product environmental compliance?

Email productcompliance@molex.com
For a multiple part number RoHS Certificate of Compliance, click here

Please visit the Contact Us section for any non-product compliance questions.

Search Parts in this Series
55659Series

Use With
54596