THIS DRAWING IS UNPUBLISHED. RELEASED FOR PUBLICATION -,- .
© COPYRIGHT - By - ALL RIGHTS RESERVED.

LOC	DIST
—	—

REVISIONS

P	LTR	DESCRIPTION	DATE	DWN	APVD
	C2	NEW DRAWING PER ECO-11-019045	21MAR12	KH	DR

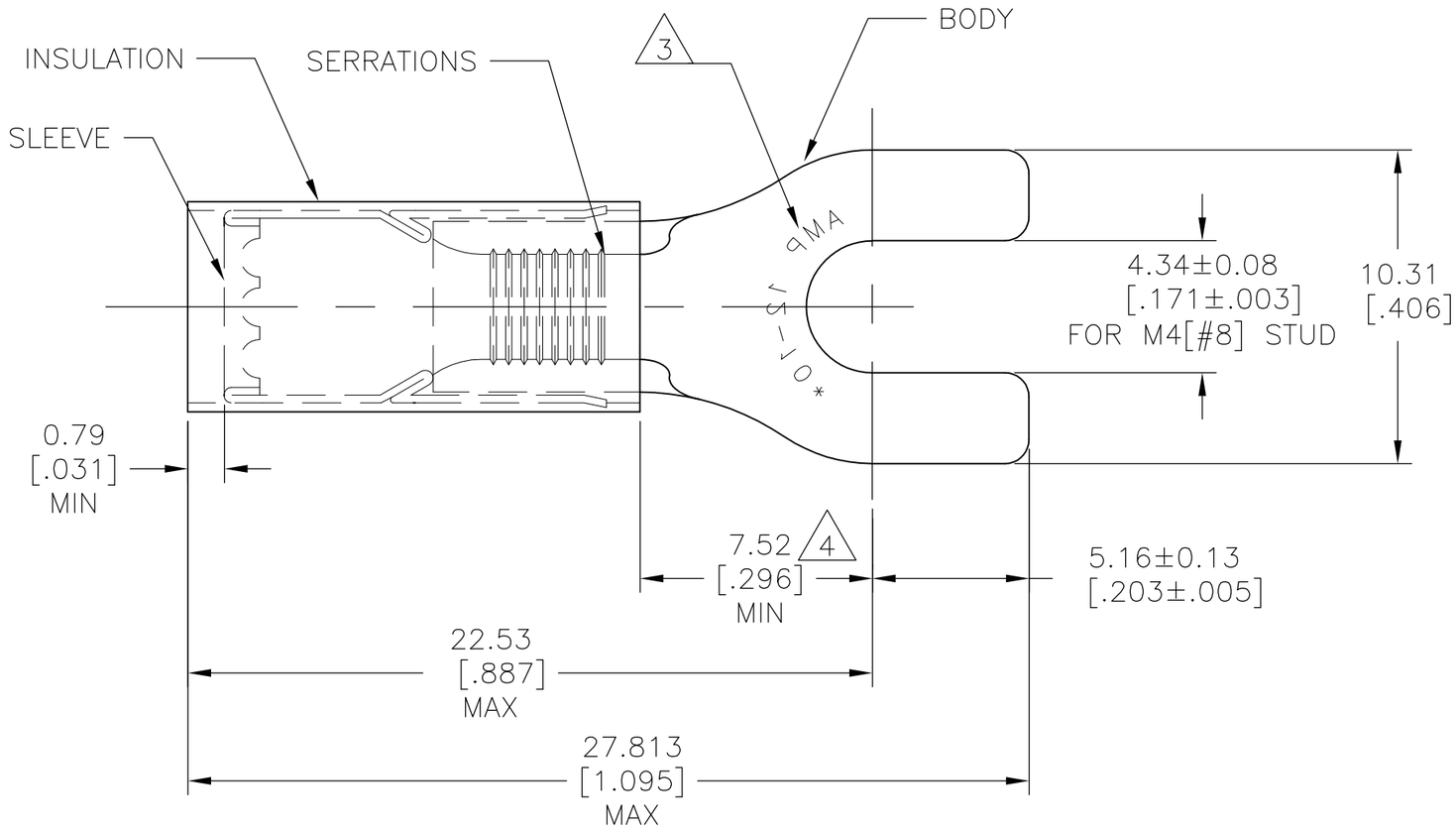

AMP WIRE RANGE	Listed FILE E13288	LR7189 Certified
12-10 AWG SOLID OR STRANDED	12-10 AWG SOLID OR STRANDED	12-10 AWG SOLID OR STRANDED

1 TONGUE MATERIAL THK: 1.02±0.05[.040±.002]

2 FOR WIRE INSULATION DIA: 3.81[.150] TO 5.84[.230]

3 STAMP AMP 12-10* APPROX AS SHOWN

4 DIMENSION APPLIES FROM EDGE OF METAL WIRE BARREL TO CENTER OF STUD.

5 MATERIAL:
BODY&SLEEVE: COPPER PER ASTM B152
INSULATION: NYLON.

6 FINISH:
BODY&SLEEVE: TIN PLATE PER ASTM B545
INSULATION: COLOR-YELLOW

QTY	PACKAGE TYPE	PART NO
50	LOOSE PC, BOX	8-32588-2
2500	ON TAPE REEL	2-32588-1
500	LOOSE PIECE	32588

AMP INCORPORATED
CUSTOMER SERVICE SYSTEMS

FOR ADDITIONAL PRODUCT INFORMATION OR COPIES OF DRAWINGS AND TECHNICAL DOCUMENTS	PRODUCT INFORMATION CENTER 1-800-522-6752	RECOMMENDED OPERATING TEMPERATURE: 105°C [221°F]
FOR APPLICATION TOOLING INFORMATION	TOOLING ASSISTANCE CENTER 1-800-722-1111	VOLTAGE RATING: 300V MAX
FOR ORDER ENTRY	1-800-526-5142	WIRE CROSS SECTIONAL AREA RANGE: 2.62-6.64mm² [5,180-13,100] SOLID OR STRANDED

THIS DRAWING IS A CONTROLLED DOCUMENT.

DIMENSIONS: mm [INCHES]

TOLERANCES UNLESS OTHERWISE SPECIFIED:
0 PLC ± -
1 PLC ± -
2 PLC ± 0.20[.008]
3 PLC ± -
4 PLC ± -
ANGLES ± 5°

MATERIAL 5

FINISH 6

DWN	KIRAN HOLAL	21MAR12
CHK	ROHDE DANIEL	21MAR12
APVD	ROHDE DANIEL	21MAR12
PRODUCT SPEC	—	
APPLICATION SPEC	—	
WEIGHT	—	

TE Connectivity

NAME: WIRE TERMINAL P.I.D.G SPADE WIRE SIZE: 12-10

SIZE	CAGE CODE	DRAWING NO	RESTRICTED TO
A3	00779	C-32588	—

CUSTOMER DRAWING | SCALE 6:1 | SHEET 1 OF 1 | REV C2

1470-19 (3/11)