The 7000 Universal Range of Audio and Video Connectors employs many innovative features unique to the Deltron series. They are suitable for use in both commercial and industrial electronics applications, where reliability, simple operation and the elimination of RF and mechanical interference is necessary. Common uses include mixing desks, tape recorders, video recorders, DAT recorders and test instrumentation.

- -Completely interchangeable with all leading manufacturers of XLRs.
- -HOUSING: a rugged diecasting offering full RF protection, with a small industrial standard flange.
- -INSERT: thermoplastic with high mechanical, thermal and electrical properties excellent chemical resistance, and dimensional stability.
- -CONTACTS: precision machined in brass with generous solder buckets to accept a wide range of cable sizes.
- -LATCHING: a unique design with minimum press action offering the widest latching area for positive locking ad straight through grounding.
- -CODING: a unique interchangeable system of coloured plastic buttons providing a quick and easy system of identification (when the connector is front mounted).
- - a short press action and compact design means minimum protraction from the front panel.

Dimensions

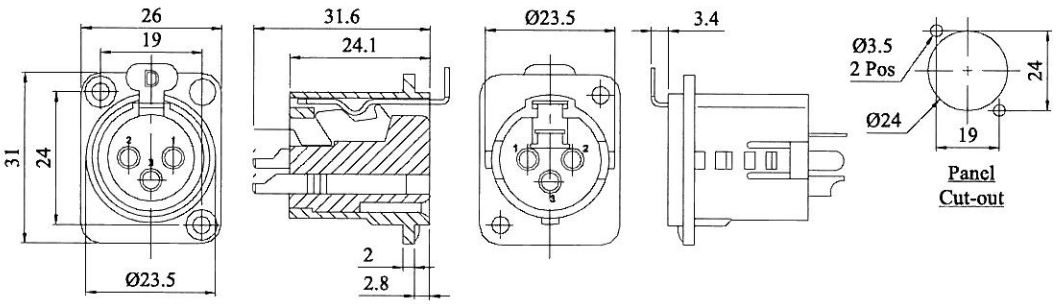

Deltron Part No	Silver Contacts		Gold Contacts	
	Nickel	Black	Nickel	Black
3-Way	716-0300	718-0300	722-0300	724-0300
4-Way	716-0400	718-0400	722-0400	724-0400
5-Way	716-0500	718-0500	722-0500	724-0500

Mechanical Properties	
Housing	Zinc high pressure diecasting satin nickel or black chrome
Contact base	Valox DR48 (UL94 V-0)
Contacts	Brass, 3 microns silver anti-tarnish finish, or 0.5 microns gold plate
Push lever	Spring steel, nickel plate 3 microns silver plate
Earth tag	Spring steel, nickel plate 3 microns silver plate
Ident buttons	Acetal (UL 94 HB)
Ident options	Black, Brown, Red, Orange, Yellow, Green, Blue, Violet, Grey, White
Operating Temp	-30°C to +80°C
Insertion force	20N
Withdrawal force	10N
Min No. insertions	10,000
Electrical Properties	
Number of contacts	3, 4 or 5
Rated current per contact	16, 10, 7.5 Amps
Maximum wire size	10, 13 or 14 AWG
(solid)	6, 3 or 2.5 mm^2
Cap. Between contacts	4, 7 or 7 pF
Rated voltage	50 Volts ac
Test voltage	1500 Volts ac
Contact resistance	3m Ω
Insulation resistance	1G Ω

CONVERTED FROM PS0631 ISS6 (07.08.95) IN JAN 2003

DrgNo 716-718-722-724	TITLE UNIVERSAL – CHASSIS SOCKETS		ALL DIMENSIONS IN MM ANGLES IN DECIMAL DEGREES
DEM	ISSUE 10	GENERAL SPECIFICATION FOR MULTIPOLE CONNECTOR	CUSTOMER / FILTER REF (LGS00176)
		Aprvd Date 20.02.08 / Aprvd By BFS / Drwn by BS / Scale: NTS / Sheet 1 / 1	

© DEM Manufacturing Limited E-Mail sales@dem-uk.com, Website www.dem-uk.com. Phone +44 1724 273200 Fax +44 1724 280353