THIS DRAWING IS UNPUBLISHED. RELEASED FOR PUBLICATION -,- .
© COPYRIGHT - By - ALL RIGHTS RESERVED.

LOC	DIST
J	—

REVISIONS 変更

P	LTR	DESCRIPTION	DATE	DWN	APVD
	L2	REVISED(ECR-14-018055)	17MAR2015	W.C	V.P

1 使用するコンタクトは 170262 又は 170263.
2 ロッキング凸部位置は長手方向の中央。

1 CONTACTS, 170262 & 170263 ARE USED.
2 LOCKING PROTRUSION IS PLACED ON THE CENTER OF HOUSING.

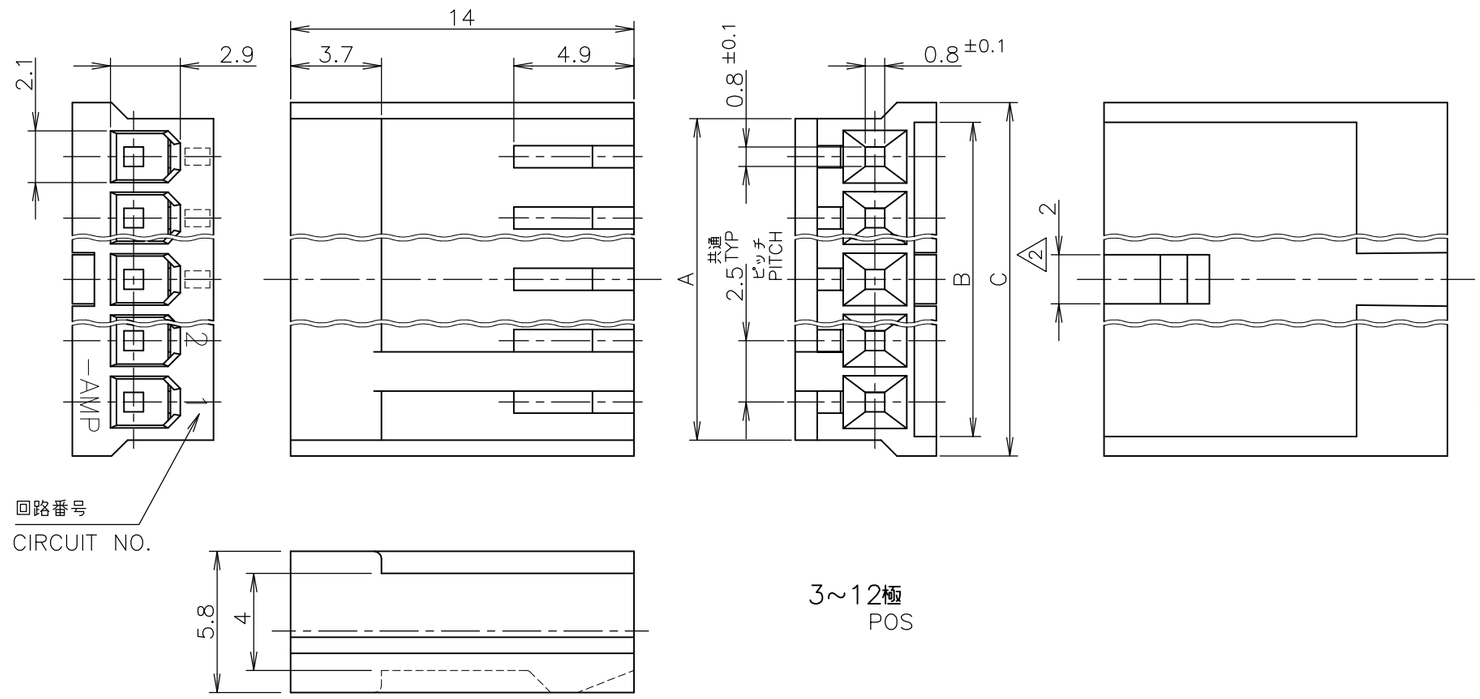

3~12極
POS

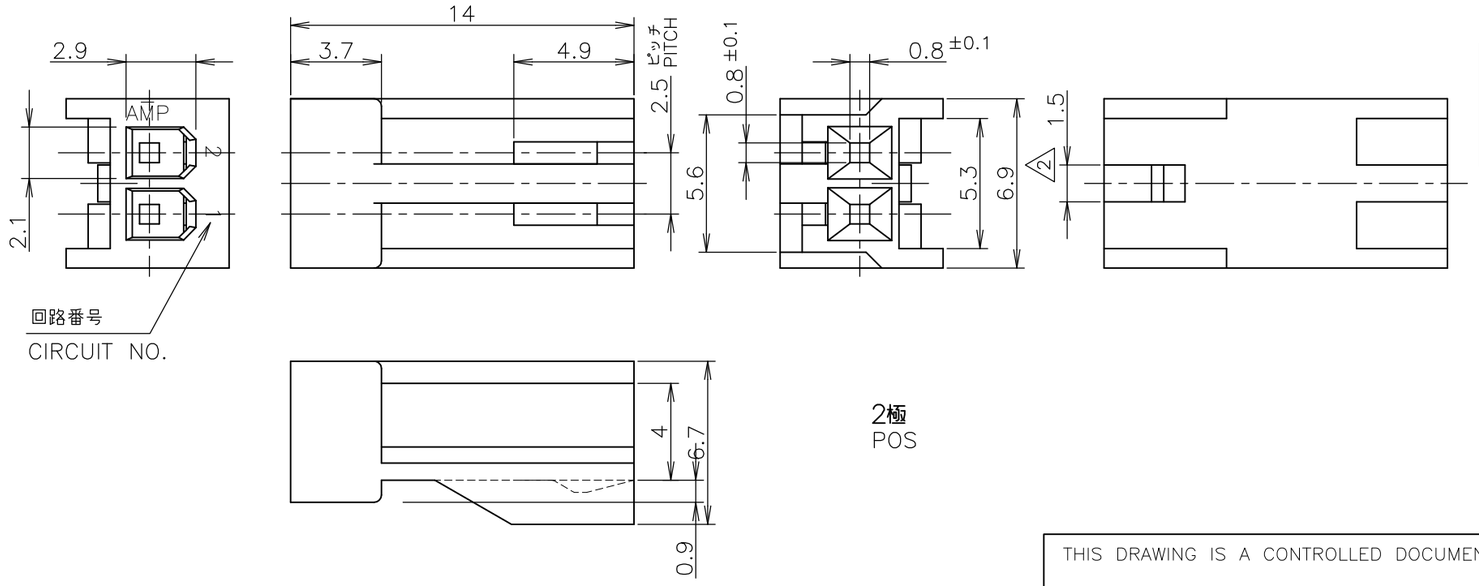

2極
POS

	C	B	A	極数 (POS)						
						赤色 (RED)		緑色 (GREEN)		
						型番(PART NUMBER)				
OBSOLETE	~~39.4~~	~~37.8~~	~~38.1~~	~~15~~		~~9-171822-5~~		~~7-171822-5~~		
OBSOLETE	~~36.9~~	~~35.3~~	~~35.6~~	~~14~~		~~9-~~	~~-4~~	~~7-~~	~~-4~~	
OBSOLETE	~~34.4~~	~~32.8~~	~~33.1~~	~~13~~		~~9-~~	~~-3~~	~~7-~~	~~-3~~	
OBSOLETE	~~29.4~~	~~27.8~~	~~28.1~~	~~11~~		~~9-~~	~~-1~~	~~7-~~	~~-1~~	
	31.9	30.3	30.6	12		9-	-2	7-	-2	
	26.9	25.3	25.6	10		9-	-0	7-	-0	
	24.4	22.8	23.1	9		8-	-9	6-	-9	
	21.9	20.3	20.6	8		8-	-8	6-	-8	
	19.4	17.8	18.1	7		8-	-7	6-	-7	
	16.9	15.3	15.6	6		8-	-6	6-	-6	
	14.4	12.8	13.1	5		8-	-5	6-	-5	
	11.9	10.3	10.6	4		8-	-4	6-	-4	
	9.4	7.8	8.1	3		8-	-3	6-	-3	
	-図示-	SHOWN		2		8-171822-2		6-171822-2		
	C	B	A	極数 (POS)		青色 (BLUE)		黒色 (BLACK)		自然色 (NATURAL)
						型番(PART NUMBER)				
OBSOLETE	~~39.4~~	~~37.8~~	~~38.1~~	~~15~~	~~5-171822-5~~		~~3-171822-5~~		~~1-171822-5~~	
OBSOLETE	~~36.9~~	~~35.3~~	~~35.6~~	~~14~~	~~5-~~	~~-4~~	~~3-~~	~~-4~~	~~1-~~	~~-4~~
OBSOLETE	~~34.4~~	~~32.8~~	~~33.1~~	~~13~~	~~5-~~	~~-3~~	~~3-~~	~~-3~~	~~1-~~	~~-3~~
OBSOLETE	~~29.4~~	~~27.8~~	~~28.1~~	~~11~~	~~5-~~	~~-1~~	~~3-~~	~~-1~~	~~1-~~	~~-1~~
	31.9	30.3	30.6	12	5-	-2	3-	-2	1-	-2
	26.9	25.3	25.6	10	5-	-0	3-	-0	1-	-0
	24.4	22.8	23.1	9	4-	-9	2-	-9		-9
	21.9	20.3	20.6	8	4-	-8	2-	-8		-8
	19.4	17.8	18.1	7	4-	-7	2-	-7		-7
	16.9	15.3	15.6	6	4-	-6	2-	-6		-6
	14.4	12.8	13.1	5	4-	-5	2-	-5		-5
	11.9	10.3	10.6	4	4-	-4	2-	-4		-4
	9.4	7.8	8.1	3	4-	-3	2-	-3		-3
	-図示-	SHOWN		2	4-171822-2		2-171822-2		171822-2	

THIS DRAWING IS A CONTROLLED DOCUMENT.

DIMENSIONS: 単位: 粍 mm

TOLERANCES UNLESS OTHERWISE SPECIFIED: 一般公差
0 PLC ±-
1 PLC ±-
2 PLC ±-
3 PLC ±-
4 PLC ±-
ANGLES ±-

GENERAL TOLERANCE 一般公差
10 ≧ : ±0.2
30 ≧ > 10 : ±0.25
100 ≧ > 30 : ±0.3
ANGLES : ±3°

MATERIAL 材料: 66 NYLON (UL94-0)
FINISH 仕上:

DWN H.HOSHINO 12JUN97
CHK J.TANIGAWA 12JUN97
APVD S.KUBOUCHI 03OCT97
PRODUCT SPEC 製品規格: 108-5118
APPLICATION SPEC 取付適用規格:
WEIGHT:

TE Connectivity

NAME 名称: HOUSING
AMP EI SERIES CONNECTOR

SIZE: A3 | CAGE CODE: 00779 | DRAWING NO 番号: C-171822 | RESTRICTED TO: —

CUSTOMER DRAWING | SCALE 尺度 4:1 | SHEET 1 OF 1 | REV L2