THIS DRAWING IS UNPUBLISHED. RELEASED FOR PUBLICATION -,- .
© COPYRIGHT - By - ALL RIGHTS RESERVED.

LOC	DIST
AF	50

REVISIONS

P	LTR	DESCRIPTION	DATE	DWN	APVD
	D	REVISED PER ECR-13-011489	04DEC2013	KH	PD

1 CONTINUOUS STRIP ON REELS.

2 WIRE SIZE IS [#18-#14] AWG.

3 INSULATION RANGE 3.05-3.81 [.120-.150] DIA.

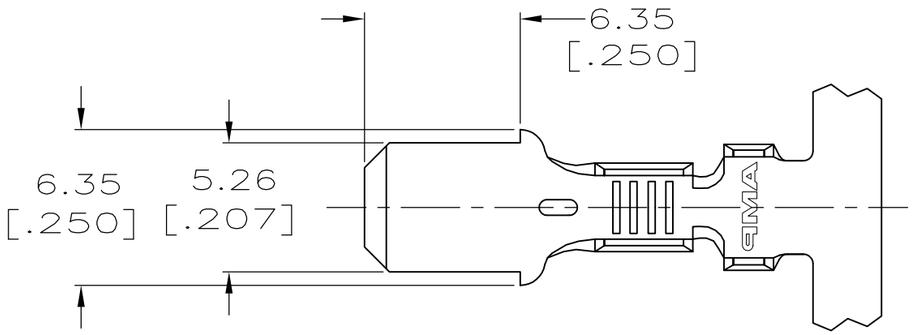

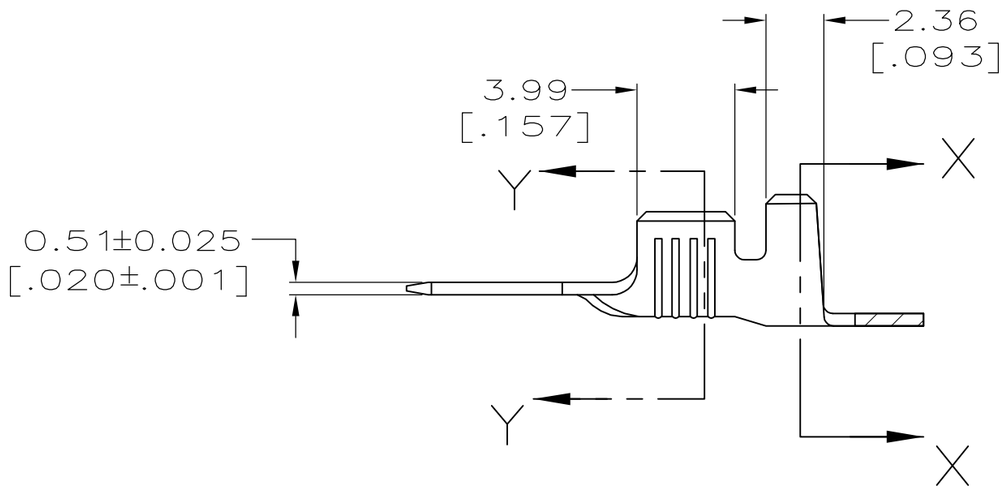

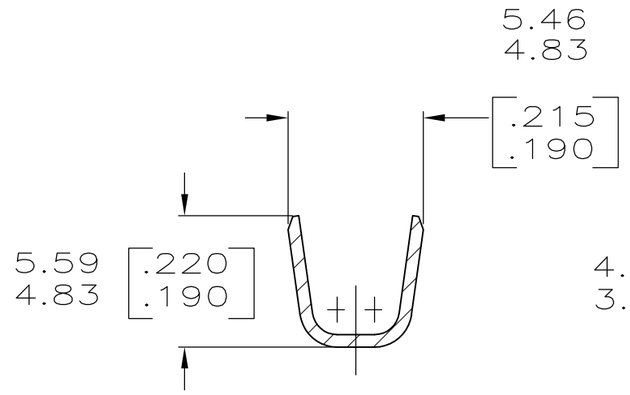

SECTION X-X

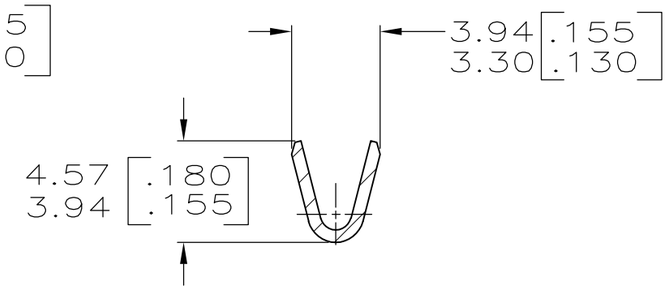

SECTION Y-Y

63223-1

PART NO.

THIS DRAWING IS A CONTROLLED DOCUMENT.

DIMENSIONS: mm [INCHES]

TOLERANCES UNLESS OTHERWISE SPECIFIED:

0 PLC	± -
1 PLC	± -
2 PLC	± 0.38 [.015]
3 PLC	± -
4 PLC	± -
ANGLES	± -

MATERIAL: BRASS

FINISH: TIN

DWN	JR RUTH	1/9/97
CHK	MS FEHER	1/9/97
APVD	J HUZVAR	1/9/97
PRODUCT SPEC	—	
APPLICATION SPEC	—	
WEIGHT	—	

TE Connectivity

NAME: TAB, FASTON, 5.21 [.205] SERIES

SIZE	CAGE CODE	DRAWING NO	RESTRICTED TO
A3	00779	C-63223	—

CUSTOMER DRAWING

SCALE	SHEET	REV
4:1	1 OF 1	D