PART NAME	PLASTIC INSTRUMENT CASE	PART No.	IP-6136 & IP-6137 & IP-6138

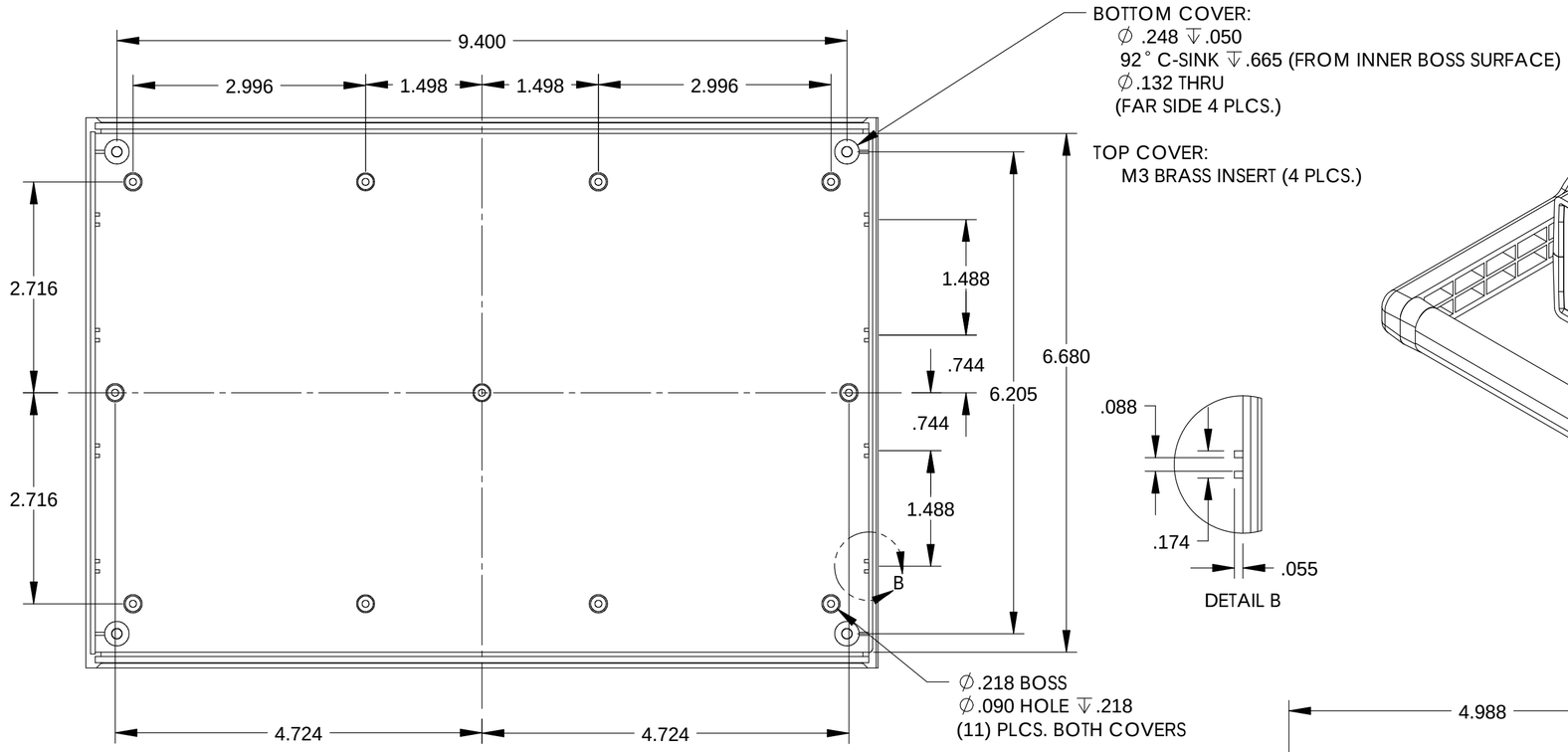

DETAIL B

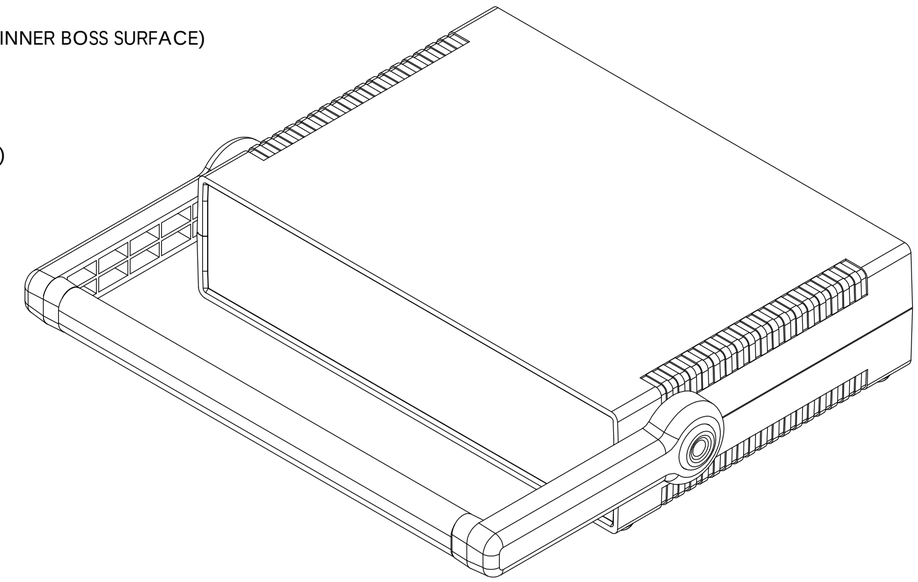

BOSSES USE EITHER M2.5 METRIC
OR #4 STD. SHEET METAL SCREWS
(NOT SUPPLIED)

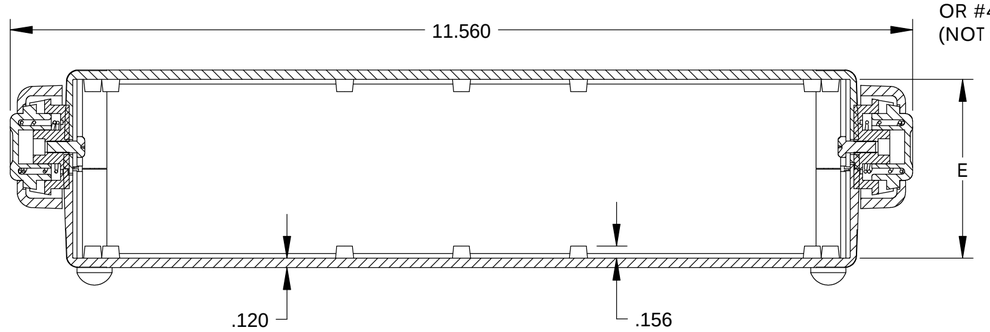

SECTION A-A

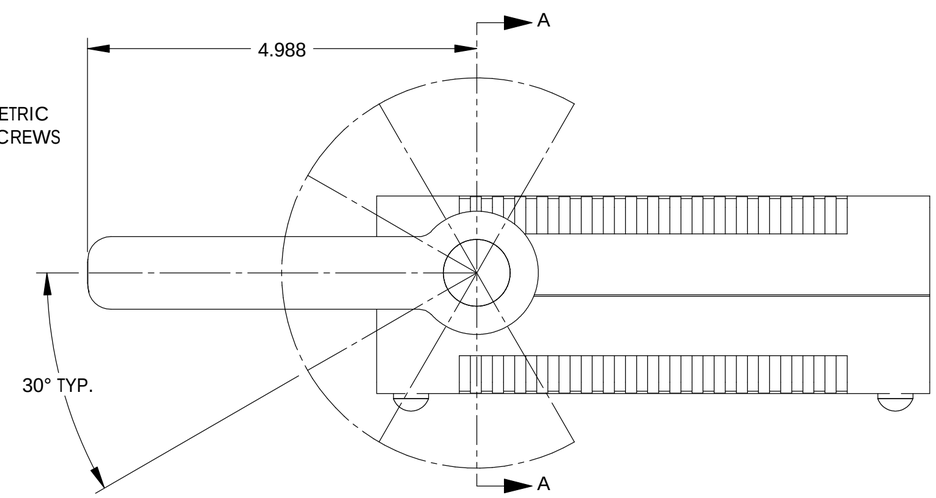

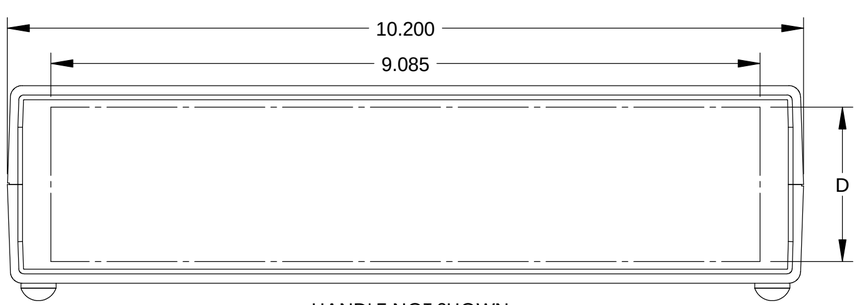

HANDLE NOT SHOWN

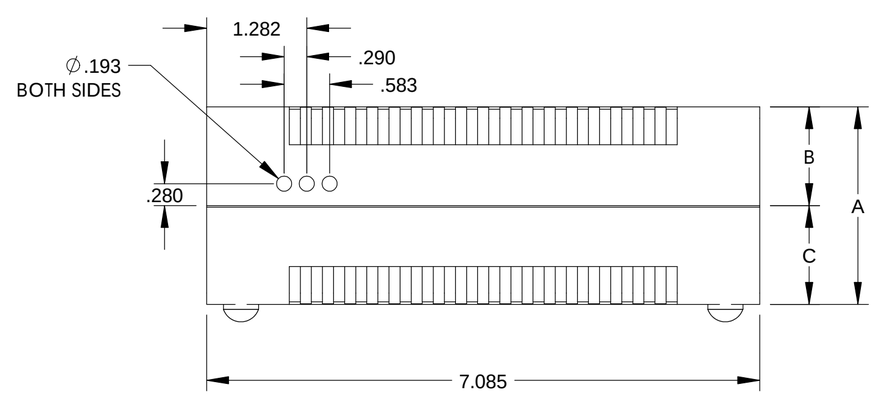

	TOTAL HEIGHT	COVER HEIGHT	BASE HEIGHT	USEABLE PANEL SPACE	INTERNAL CLEARANCE
PART No.	A	B	C	D	E
IP-6136	2.530	1.265	1.265	1.978	2.290
IP-6137	3.320	2.055	1.265	2.768	3.080
IP-6138	4.110	2.055	2.055	3.558	3.870

NOTES:
- MATERIALS & FINISHES:
  - COVERS - ABS (LIGHT GREY)
    - UL94-HB FLAMMABILITY RATING
  - PANELS - ABS (BLACK)
    - UL94-HB FLAMMABILITY RATING
  - HANDLE SUPPORTS - ABS (GREY)
    - UL94-HB FLAMMABILITY RATING
  - HANDLE - ALUMINUM EXTRUSION (CLEAR ANODIZE)

- HARDWARE INCLUDED:
  - HANDLE KIT AND (2) M4 x 10mm PAN HEAD MOUNTING SCREWS INCLUDED
  - (4) M3 x 25mm FLAT HEAD SCREWS
  - (4) RUBBER FEET

ALL DIMENSIONS HAVE ±.015 TOLERANCE UNLESS OTHERWISE SPECIFIED

Mouser Electronics

Authorized Distributor

Click to View Pricing, Inventory, Delivery & Lifecycle Information:

Bud Industries:

IP6136 handle assembly IP-6137 IP6136 IP6138