PRODUCT NUMBER

5 3 6 3 1 - X X X - X X X LF

PLATING
G=30μ"[0.76μm]GOLD
ON CONTACT AREA
100μ"[2.54μm]TIN/LEAD ON TAIL

LEAD FREE PLATING
G=30μ"[0.76μm]GOLD
ON CONTACT AREA
100μ"[2.54μm]PURE TIN ON TAIL

TAIL LENGTH
2 = .120 [3.05]
3 = .160 [4.06]
6 = .610 [15.49]
8 = .733 [18.62]

POLARIZATION

LEAD FREE OPTION
NOTE 10,11

DASH NO.	POSITIONS	HEADER STYLE
10	2 X 5	A
14	2 X 7	C
16	2 X 8	D
20	2 X 10	D
26	2 X 13	D
34	2 X 17	D
40	2 X 20	D
50	2 X 25	D

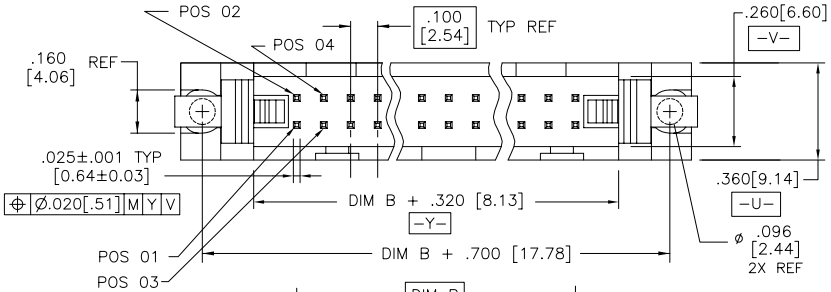

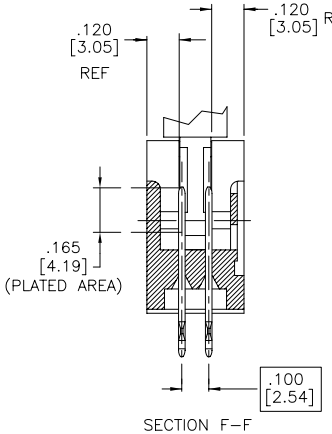

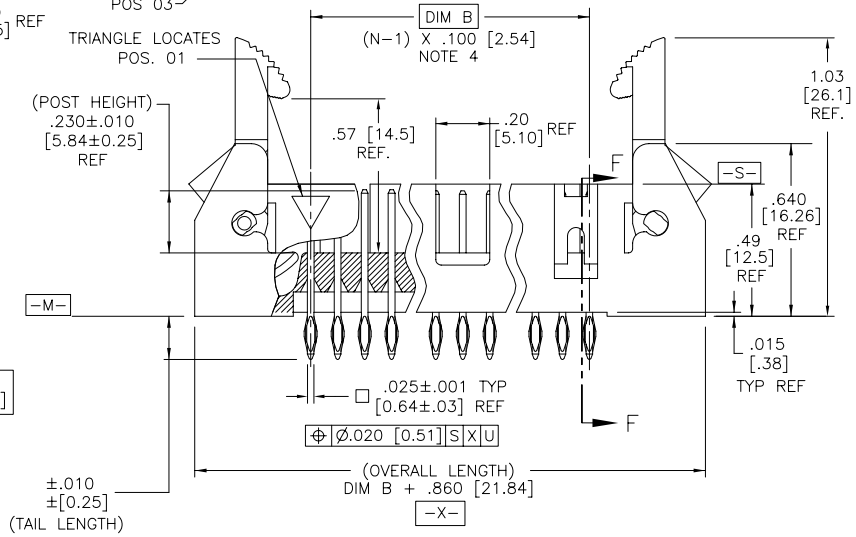

NOTES:

1. HOUSING MAT'L: HIGH TEMPERTURE THERMOPLASTIC. UL94V-0. COLOR : BLACK
2. PIN MATERIAL: PHOSPHOR-BRONZE
3. 3 LBS/1.36 KG MIN. RETENTION.
4. TO DETERMINE DIMENSIONS: N = NUMBER OF POSITIONS. EXAMPLE: 10 POS., (N-1) x .100[2.54]=.900[22.87]
5. PACKAGED PER BUS-14-312 IN TRAYS.
6. UNDERPLATING: 50μ"/1.27μm Ni.
7. FOR POLARIZATION, SPECIFY POSITION NUMBER (i.e., 03= PIN 3) TO OMIT PIN. OMIT FROM PRODUCT NUMBER IF THIS FEATURE IS NOT APPLICABLE.
8. RECOMMENDED PLATED-THRU-HOLE DIMENSIONS ARE: DRILLED HOLE: .0453/1.604±.0010/.025 DIA COPPER PLATING THICKNESS .001/.025 TO .003/.076 SOLDER PLATING THICKNESS: .0003/.076 TO .0007/.0178 OVERALL HOLE SIZE: .040/1.016±.003/.076 DIA
9. RECOMMENDED MOUNTING SCREW - #2-56 FILLISTER HEAD MACHINE SCREW .25/6.35 LONG FOR .063/1.58 & .094/2.38 BOARDS, .313/7.93 LONG FOR .125/3.18 BOARDS.
10. ADD "LF" SUFFIX AT THE END OF PART NUMBER FOR LEAD FREE OPTION.
11. THIS PRODUCT MEETS EUROPEAN UNION DIRECTIVES AND OTHER COUNTRY REGULATION AS DESCRIBED IN GS-22-008.
12. THE PRODUCT IS NOT INTENDED TO BE EXPOSED TO A MANUFACTURING SOLDER PROCESS.

HEADER STYLE (LATCHES NOT SHOWN)

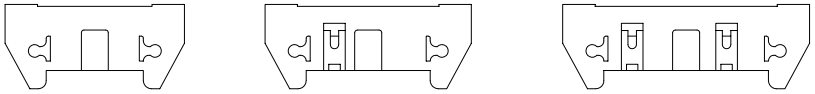

2x5 STYLE A | 2x7 STYLE C | 2 X 8 & LARGER STYLE D

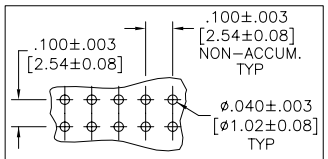

RECOMMENDED HOLE PATTERN

ltr	ecn no	dr	date
A	V02362	AZ	9/27/00
B	M05-0089	ERE	5/20/05
C	M06-0289	AGS	7/29/06

mat'l. code

surface ISO 1302

tolerance ISO 406 ISO 1101

tolerances unless otherwise specified: angles 0°±2°; linear .XX±.01/.3, .XXX±.005/.13, .XXXX±.0020/.051

projection

INCH/MM

scale 1:1

dr	A. ZEREBILOV	9/27/00
engr	M. MOSTOLLER	9/27/00
chr	M. MOSTOLLER	9/27/00
appd	M. MOSTOLLER	9/27/00

product family: QUICKIE

title: .100/2.54cc EJECT LATCH SHOROUDED VERTICAL HEADER

dwg no: 53631 sheet 1 of 1 size A3

type: Product Customer Drawing

sheet index | revision C | sheet 1

form: A3

FCIconnect.com
Copyright FCI