LTR	EN	DESCRIPTION	APPR	BY	DATE
A	–	INITIAL RELEASE	RB	NH	9–15–06

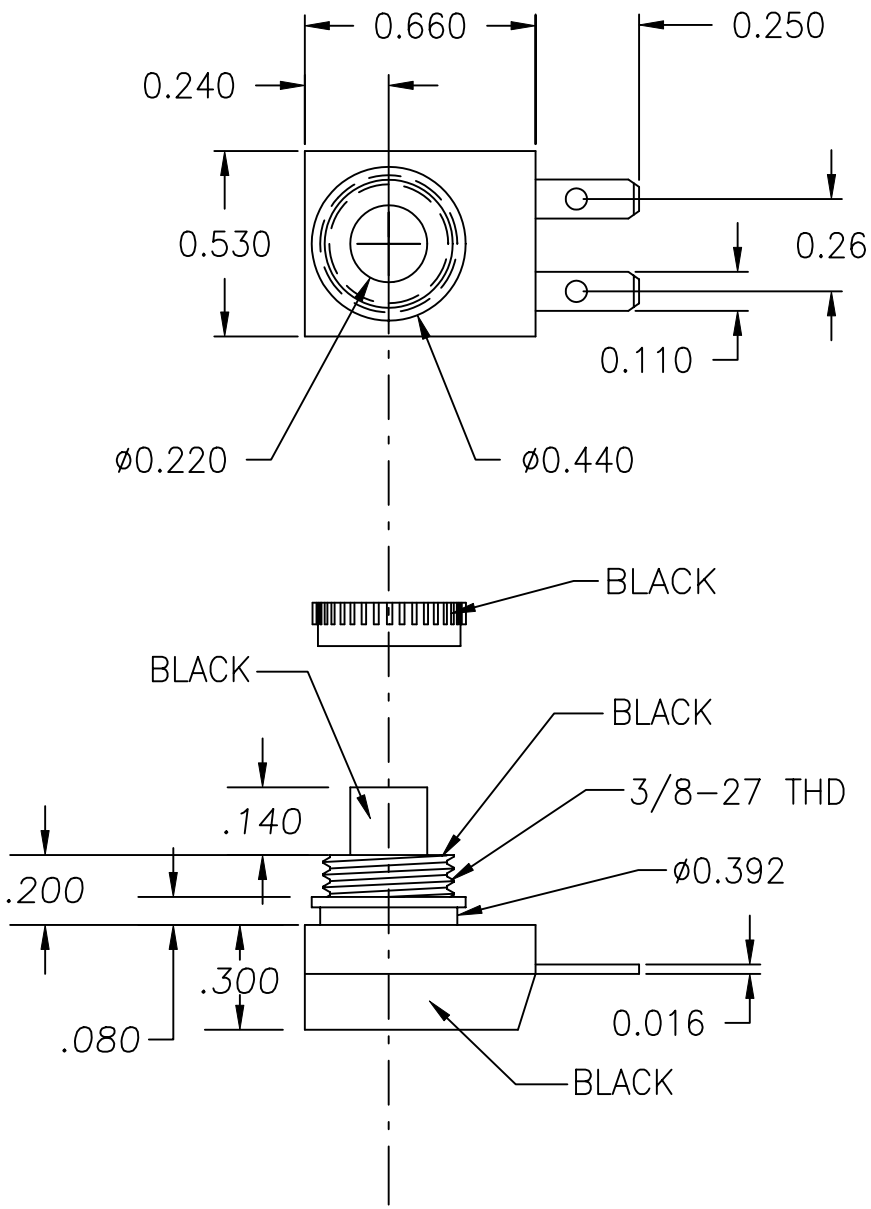

JUDCO INVENTORY NO:40–4528–00
SWITCH TYPE: PUSH ON–PUSH OFF, SPST
ELECTRICAL RATINGS: 125VAC 3A
TEMPERATURE RATING: 85°C
NUT PACKED SEPARATELY

CUSTOMER :DIGIKEY

APPROVED BY: _____
DATE: _____

DIMENSIONS IN INCHES
DIMENSIONS ARE REFERENCE

DRAWN: NH 9–15–06
APPR: KJ 9–15–06

1415U1025A.DWG

JUDCO ®
HARBOR CITY CALIFORNIA

TITLE OUTLINE
J–188B–1 ULDC W/STRAIGHT TERMINALS

DWG. NO. 1415–1025

SHEET 1 OF 1

This document embodies a product, component, and/or design proprietary to JUDCO MANUFACTURING INC., and which is protected either as a trade secret, by U.S. Patent, or by copyright. It may not be used in any way without written express consent of JUDCO MANUFACTURING INC.